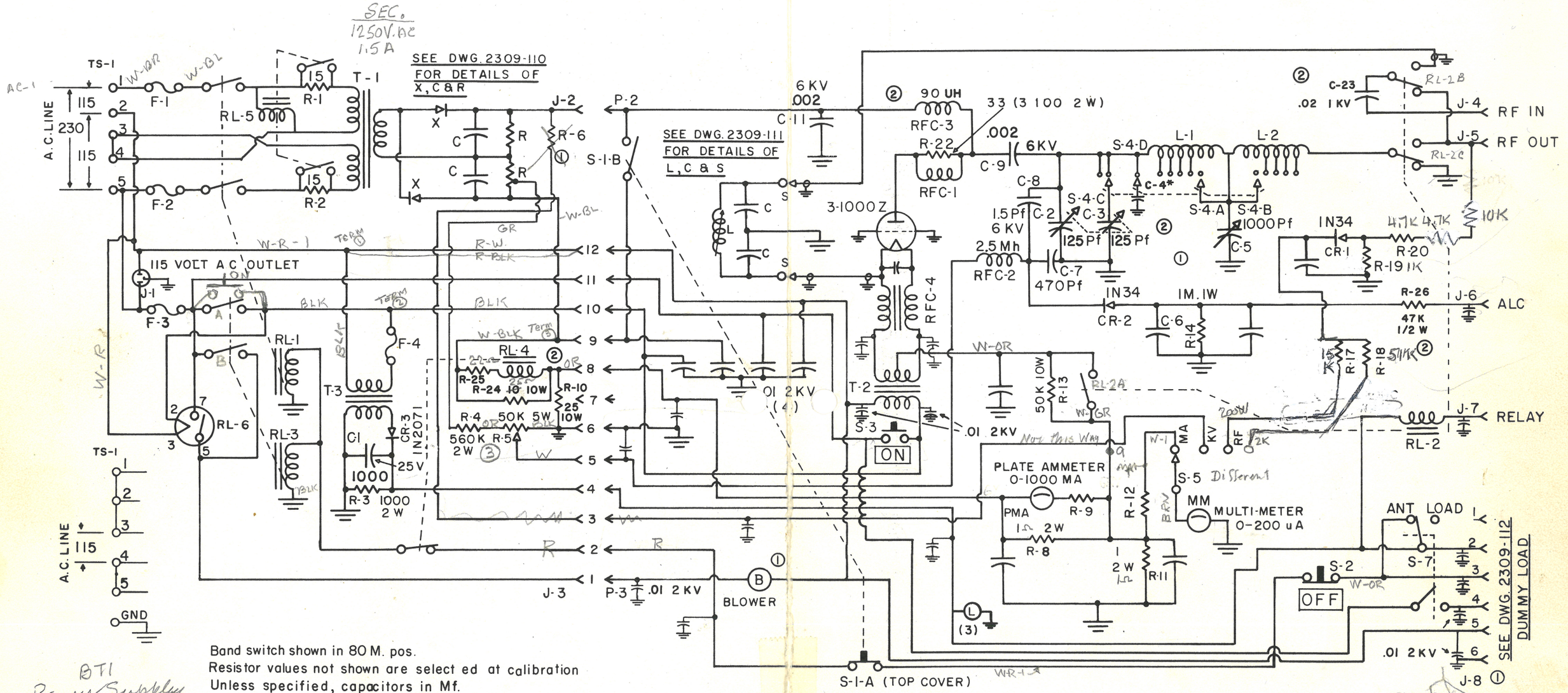

Band switch shown in 80 M. pos.
Resistor values not shown are select ed at calibration
Unless specified, capacitors in Mf.
" " " are .01-1000
*Optional

BTI Power Supply

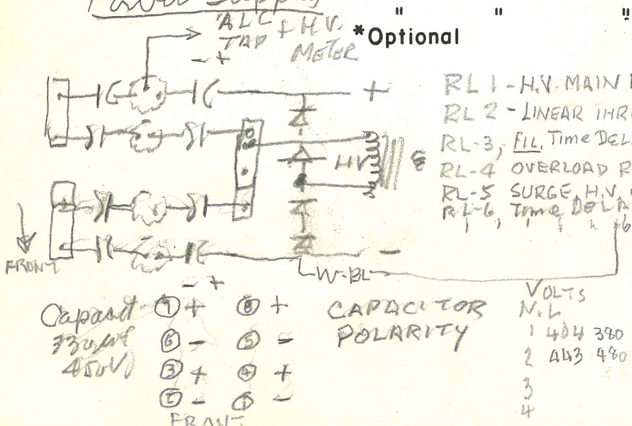

RL 1 - H.V. MAIN RELAY (MERCURY) DPST 12V DC Coil Above Power Deck
RL 2 - LINEAR THRU RELAY, (2P) & 50K BIAS (1P) 3P.DT 12V DC Coil
RL-3, FIL. Time Delay Tube Relay 2PST 12VDC Coil
RL-4 OVERLOAD RELAY 2PST (NC) 12VDC Coil
RL-5 SURGE, H.V. CONTROL RELAY
RL-6, Time Delay Relay - BLOWER CONTROL DPST NO 115V.AC

VOLTS
1 404 380
2 443 480
3
4

Dwn. 8-10-66
Rev. 10-18-66 ① bt. BLOWER
Rev. 12-9-66 ② tm. Oil Relay

LK-2000

DWG. 2309-108

LATEST Yes

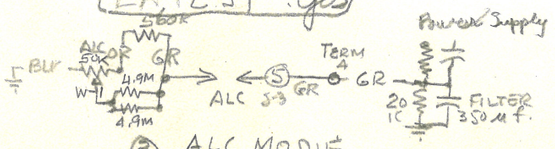

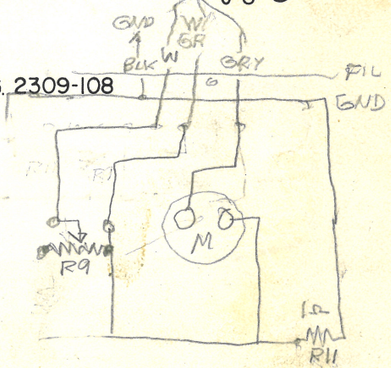

Wx 105.35 (137)