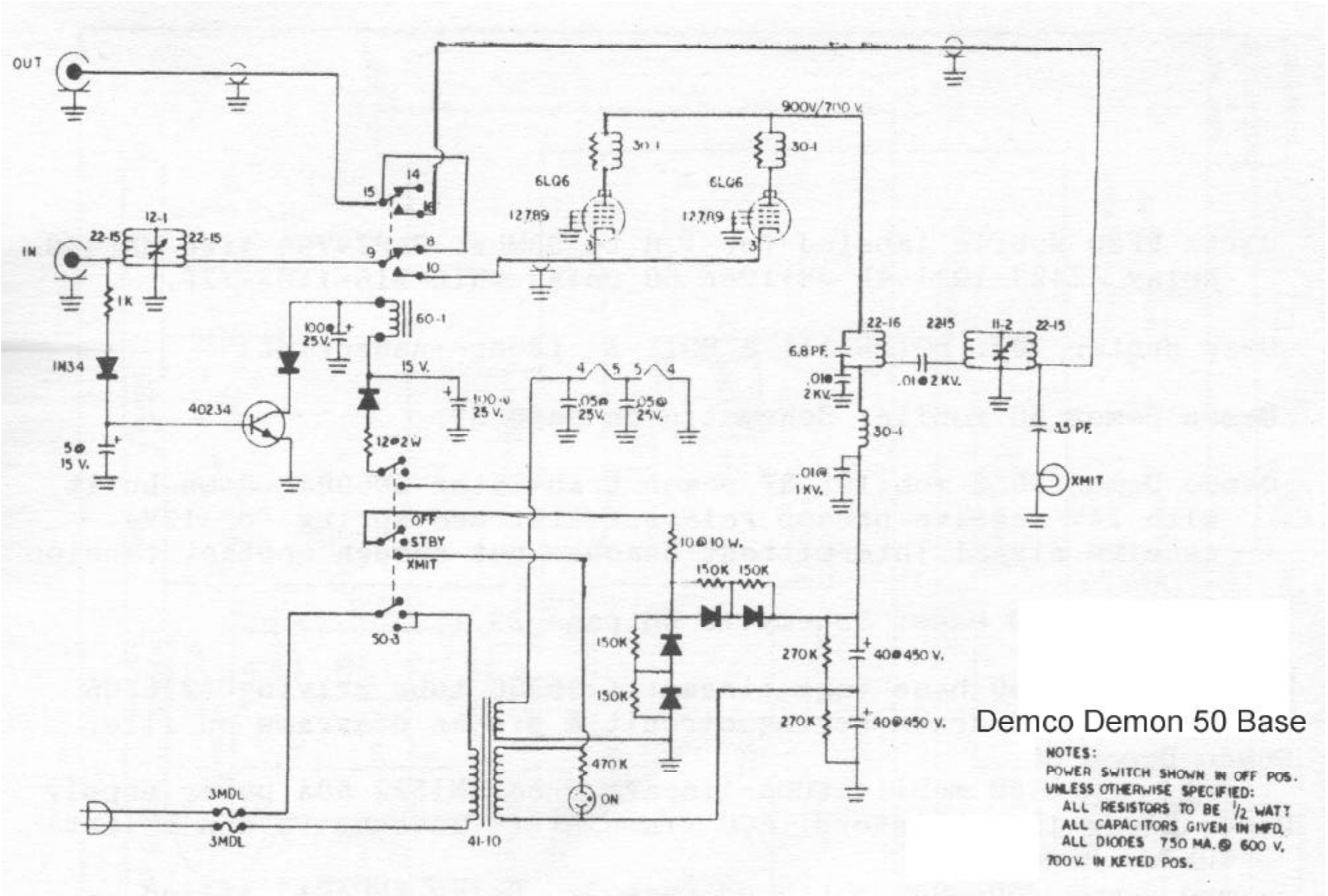

Demco Demon 50 Base

NOTES:
POWER SWITCH SHOWN IN OFF POS.
UNLESS OTHERWISE SPECIFIED:
ALL RESISTORS TO BE 1/2 WATT
ALL CAPACITORS GIVEN IN MFD.
ALL DIODES 750 MA. @ 600 V.
700V. IN KEYED POS.