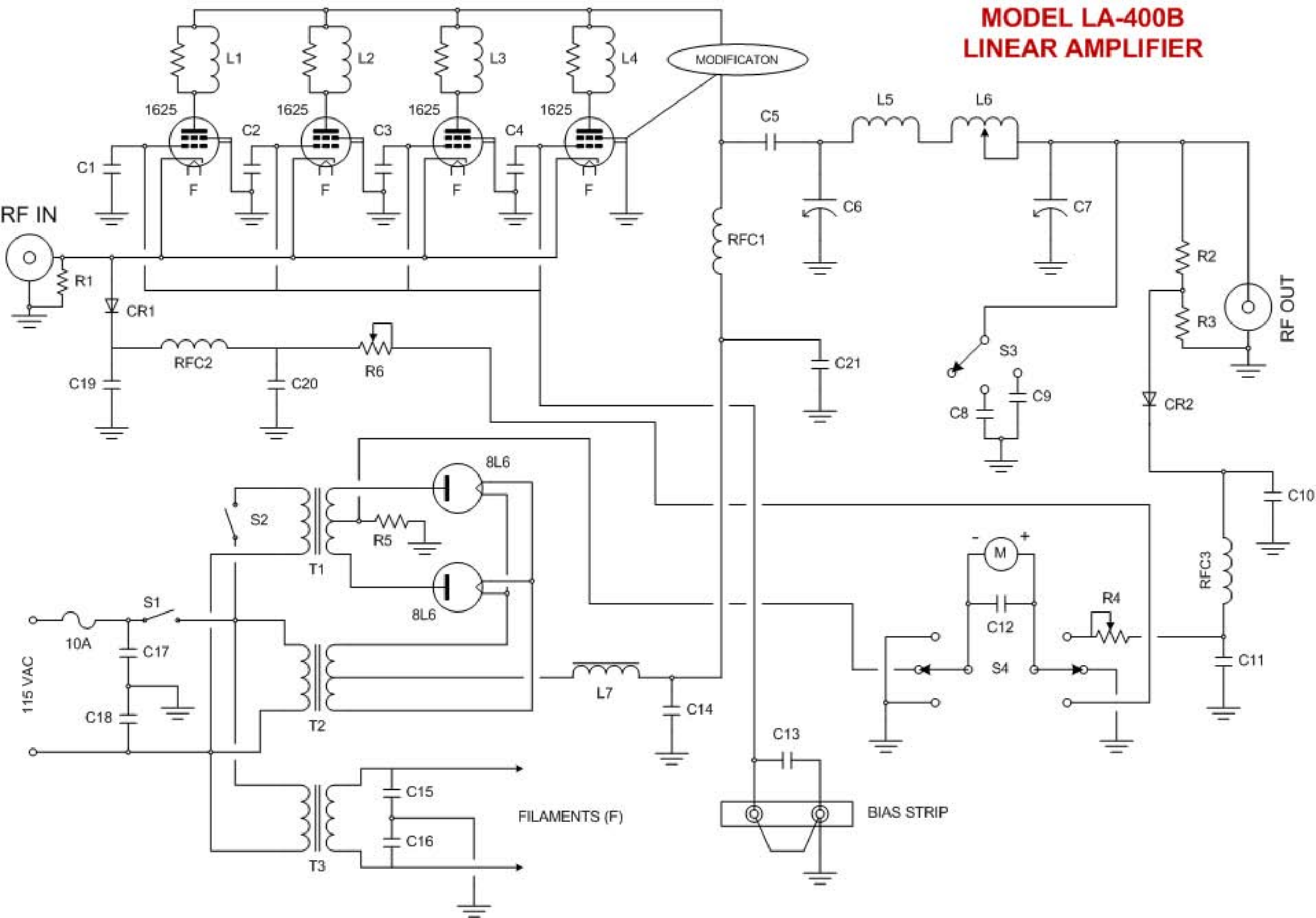MODEL LA-400B
LINEAR AMPLIFIER