RF Concepts
Alpha 4500A Series
Radio-Frequency Power Meter

User Manual

rfconcepts.com
Document Issue 1.0
December 2014

Alpha 4500A Series RF Power Meter User Manual

RF Concepts LLC
634 S Sunset St
Longmont CO 80501
303-473-9232

Prepared for RF Concepts by MH/GP/NG/LW.

To reach technical support or obtain copies of this document, go to **rfconcepts.com**.

Copyright © 2014 RF Concepts LLC. All rights reserved. Specifications subject to change without notice.

IMPORTANT

FCC Notice

This equipment has been tested and found to comply with the limits for a Class B digital device, pursuant to part 15 of the FCC Rules. These limits are designed to provide reasonable protection against harmful interference in a residential installation. This equipment generates, uses, and can radiate radio frequency energy and, if not installed and used in accordance with the instructions, may cause harmful interference to radio communications. However, there is no guarantee that interference will not occur in a particular installation. If this equipment does cause harmful interference to radio or television reception, which can be determined by turning the equipment off and on, the user is encouraged to try to correct the interference by one or more of the following measures:

- Reorient or relocate the receiving antenna.
- Increase the separation between the equipment and receiver.
- Connect the equipment into an outlet on a circuit different from that to which the receiver is connected.
- Consult the dealer or an experienced radio/TV technician for help.

Changes or modifications to this device not expressly approved by the Manufacturer could void the user's authority to operate this equipment.

Contents

1. Introduction 1-1
1.1 Product Capabilities 1-1
1.2 Theory of Operation 1-5
1.3 Product Safety 1-7
1.4 Product Warranty 1-7
1.5 Product Assistance 1-8
1.6 Product Specifications 1-8

2. Power-Meter Components 2-1
2.1 (Models 4510A/4520A) Analog Meter and Digital LED Display 2-2
2.2 (Models 4510A/4520A) Control Switches 2-3
2.3 SoftMeter Software 2-4
2.4 Rear-Panel Connectors 2-5

3. Setting Up the Power Meter 3-1
3.1 Position the Meter 3-1
3.2 (Optional) Set Up the Host PC and SoftMeter Software 3-2
3.3 Connect the Cables 3-3
3.4 (SoftMeter Users) Configure the PC's USB COM Port 3-5
3.5 (Optional) Change the RF Coaxial Connectors 3-5

4. Operating the Power Meter 4-1
4.1 Power the Meter Up/Down 4-1
4.2 Connect the Meter to the RF Source and Load to Be Measured 4-2
4.3 Determine What to Measure 4-2
4.4 Determine the Measurement Modes 4-3
4.5 (SoftMeter Users) Read Measurements on the Software Display 4-5
4.6 (Models 4510A/4520A) Read Measurements on the Physical Displays 4-7
4.7 (Models 4510A/4520A) Enter/Exit Sleep Mode 4-8

5. Troubleshooting the Power Meter 5-1

Terminology Term-1

Schematics Schem-1

List of Procedures

Procedure 3-1, “Position the meter,” page 3–1

Procedure 3-2, “Set up the host PC and SoftMeter software,” page 3–2

Procedure 3-3, “Connect the cables,” page 3–3

Procedure 3-4, “Configure the USB COM port,” page 3–5

Procedure 3-5, “(Optional) Change the RF coaxial connectors,” page 3–6

Procedure 4-1, “Power the meter up or down,” page 4–1

Procedure 4-2, “Read measurements on the software display,” page 4–6

Procedure 4-3, “(Models 4510A/4520A) Read measurements on the physical displays,” page 4–7

1 Introduction

1.1 Product Capabilities 1–1
1.2 Theory of Operation 1–5
1.3 Product Safety 1–7
1.4 Product Warranty 1–7
1.5 Product Assistance 1–8
1.6 Product Specifications 1–8

Congratulations on your purchase of a professional-quality Alpha 4500A series power meter.

This manual contains information that you must follow, and cautions and warnings that you must heed, to ensure safe setup and operation. Before operating your power meter for the first time, it is important that you study this information carefully.

IMPORTANT

Failure to perform procedures properly may result in electric shock, fire hazard, or serious damage that is not covered under warranty.

1.1 Product Capabilities

Alpha 4500A series power meters (wattmeters) are laboratory-grade devices that measure parameters describing power flow along a 50-ohm transmission line. Specifically, they measure *forward* power, *reflected* power, *delivered* power, and *standing-wave ratio* (SWR). The following are some additional notes describing these parameters:

- *Forward power* — This is the power traveling in the forward direction, from the transmitter to the load (typically the coaxial transmission line leading to the antenna). For the ideal case of unity SWR (SWR = 1), this is also the power delivered by the transmitter to the load.
- *Reflected power* — This is the power traveling in the reverse direction, from the load to the transmitter. For the ideal case of unity SWR, the reflected power is zero.
- *Delivered power* — This is the forward power *minus* the reflected power — in other words, the power delivered by the transmitter to the

load regardless of SWR value. For example, if the forward power is 100 W and SWR = 4, then the reflected power is 36 W and the delivered power (power delivered by the transmitter to the load) is 64 W.

- *Standing-wave ratio (SWR)* — Forward-traveling and reverse-traveling (reflected) voltage waves exist on the coaxial transmission line. Large voltages can exist on the transmission line at places where these two voltages are in phase and coherently *add*. Small voltages can exist on the transmission line at places where these two voltages are out of phase and coherently *subtract*.

  SWR is defined as the ratio of the maximum possible voltage to the minimum possible voltage:

  SWR = $(V_f + V_r) / (V_f - V_r)$

  where V_f and V_r are the magnitudes of the forward- and reverse-traveling voltage waves, respectively.

  For example, if $V_f = 100$ V and $V_r = 50$ V, the largest possible voltage is 150 V and the smallest possible voltage is 50 V. So SWR = 150 / 50 = 3. Further, the forward power is 200 W, the reflected power is 50 W, and the delivered power is 150 W.

  In the ideal case, SWR = 1 and the coaxial transmission operates with minimum loss.

Four models of Alpha 4500A series power meter are available: 4505A, 4510A, 4515A, 4520A. Their capabilities are summarized in Table 1-1 and described below.

Table 1-1 Capabilities of theAlpha 4500A series power-meter models

Function	Model			
	4505A	4510A	4515A	4520A
Frequency range: • 1.75–55 MHz	✓	✓	✓	✓
Power range: • 200 mW to 3 kW (–7 to +34.8 dBW) • 1 W to 5 kW (0 to +37 dBW)	✓	✓	✓	✓
Display method: • Analog meter • Digital LED display • SoftMeter software	✓	✓ ✓ ✓	✓	✓ ✓ ✓

Ranges of operation

All power-meter models operate across the frequency range from 1.75 to 55 MHz.

As shown in Table 1-1, the models vary in their power ranges of operation. No additional “slugs” or accessories are necessary to operate over the entire power range. This feature is convenient for accurately measuring an antenna system’s SWR at very low power (such as 1 W) and then operating at high power (such as 1500 W) without having to make any changes to the meter.

All models feature enhanced linearity by implementing an algorithm to compensate for the non-log conformity of the internal logarithmic amplifier.

The radio-frequency (RF) power estimates reported by the power meters are temperature- and frequency-compensated for optimum accuracy.

The meters are highly automated and include circuitry to protect against typical operating anomalies. For example, they automatically determine the direction of RF power flow, allowing the rear-panel coaxial connectors to be connected interchangeably between RF source and load (typically the transmitter and antenna, respectively).

The meters report all measurements as streaming data through the USB serial port on the back of the unit, enabling real-time data logging of station performance.

Display method

The power-meter models vary in their display method:

- Models 4505A/4515A display data only via a host PC equipped with SoftMeter software. They do not have built-in displays.
- Models 4510A/4520A display data via SoftMeter software and, in addition, via two built-in physical displays:
  - — Analog meter — Displays either forward power or reflected power (on the top and middle scales) or SWR (on the bottom scale).
  - — Digital LED display — Displays either forward power or delivered power.

  The analog meter exhibits ample damping, which enables rapid response during normal operation yet minimizes the likelihood of damage during transit.

The built-in displays are visible in Figure 1-1 and Figure 1-2.

Figure 1-1 Model 4510A analog meter and digital LED display

Figure 1-2 Model 4520A analog meter and digital LED display

Power supply

The power meters are supplied with a universal-input (100–240 VAC, 50–60 Hz) power supply that provides a 12-VDC source. If the DC power source is removed, analog-meter movement is automatically shorted.

1.2 Theory of Operation

The functional block diagram for all of the models is shown in Figure 1-3.

Figure 1-3 Functional block diagram

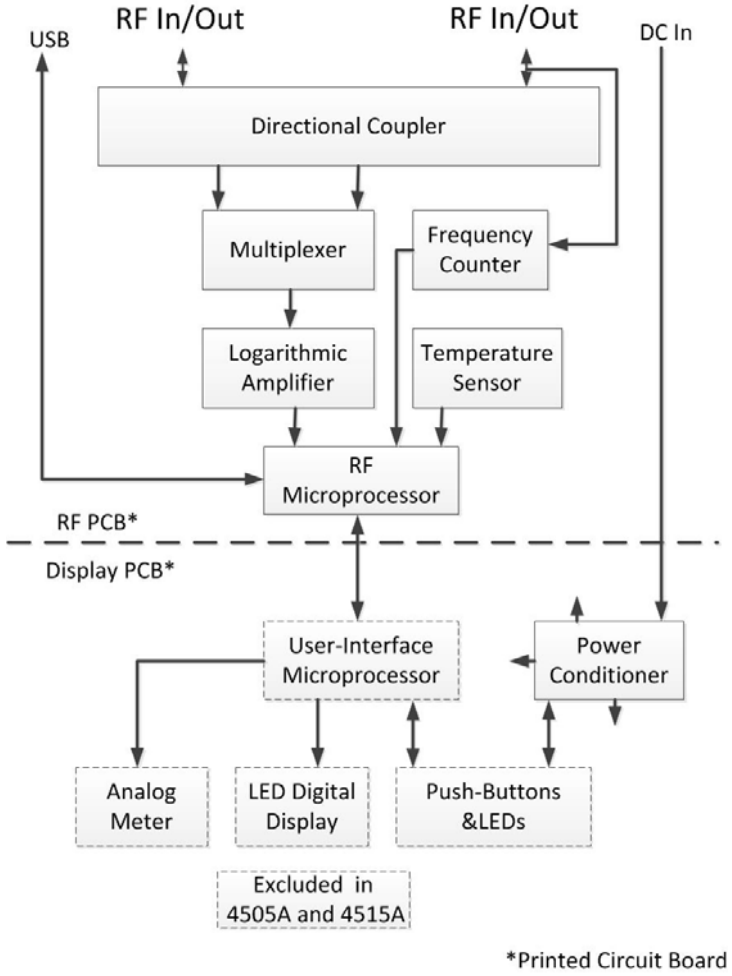

Internal functional components

The power meter contains two printed circuit boards (PCBs): the *RF PCB* and, on models 4510A/4520A, the *display PCB*.

The RF PCB (Figure 1-3, top of diagram) features two particularly important internal functional components:

- *Directional coupler*. The heart of the power meter is a proprietary directional coupler. The coupler features virtually perfect linearity, high directivity, low insertion loss (attenuation), favorable return loss, and the absence of problematic iron-core magnetics. The absence of iron-core magnetics makes the coupler virtually burnout-proof and eliminates both problematic loading of the transmitter at low frequencies and potential resonances at high frequencies[1].

- *Logarithmic amplifier*. A second important and unique feature of the power meter is the logarithmic amplifier. Made by Analog Devices, it features an advertised dynamic range of greater than 90 dB. The RF PCB is designed to use an interior portion of the advertised dynamic range (~60 dB of the advertised 90 dB) to reduce the effects of non-log conformity[2].

  The amplifier's wide dynamic range enables the meter to provide accurate power and SWR estimates at both low and high power levels. Therefore, after you set up a transmit station at a low power level (minimum: for models 4505A/4510A, ~0.25 W of forward power; for models 4515A/4520A, ~0.5 W of forward power) and minimize SWR, you can switch to full power without having to adjust or install different "slugs" in the power meter. This is an advantage over many other power/SWR meters, which, after switching from low to high power, often provide conflicting estimates of SWR.

The following paragraphs provide a more complete narrative for Figure 1-3.

Outputs from the directional coupler relate linearly to the amplitude of forward- and reverse-traveling voltage waves on the transmission line. These outputs are multiplexed (by the multiplexer) such that a single logarithmic amplifier can be used to process signals for forward- and reverse-traveling waves. Multiplexer channel-to-channel matching is virtually perfect, and, because of this, some potential measurement errors simply cancel out[3].

Outputs from the multiplexer are routed to the logarithmic amplifier, which performs as described above.

Outputs from the logarithmic amplifier are in the form of a direct-current (DC) signal proportional to the root-mean-square (RMS) value of the input RF signal. An analog-to-digital-converter (A/D) inside the RF microprocessor converts these signals into digital form.

Outputs from the digital counter and the temperature sensor allow the RF microprocessor to further refine its estimates of forward- and reverse-traveling power by compensating for effects of temperature and frequency.

1. Shunt inductance of iron-core-magnetics-based couplers can cause undesirable reactive loading of the transmitter due to insufficient inductance. Increasing the inductance (to alleviate the loading problem) can lead to problematic resonances at higher frequencies that significantly degrade meter accuracy.
2. For example, this allows the model 4510A to accurately estimate the magnitude of forward power ranging from about 3000 to 0.3 W (40 dB) with a 20-dB margin to measure the lower-amplitude reflected power.The effects of non-log conformity are *further* reduced by a compensation algorithm implemented in the RF microprocessor. The compensation is applied to the upper 44 dB of range (0.2 W to 5 kW for model 4520A).
3. For example, the process of estimating SWR involves the ratio V_r/V_f. In the multiplexed case, some of the potential error due to the response equalizer and logarithmic amplifier cancel out.

The RF microprocessor drives a USB port on the rear panel of the power meter. This port allows direct computer access to digital data describing SWR, forward-power, and reverse-power estimates from the RF microprocessor. The port is also used in the manufacturing process to download unit-specific polynomial coefficients to compensate for temperature, frequency, and non-log conformity of the logarithmic amplifier.

The RF microprocessor communicates with the user-interface microprocessor on the display PCB (models 4510A/4520A only) by way of an I^2C interface. This allows the user-interface microprocessor to send commands to the RF microprocessor as well as to receive power and SWR information from the RF microprocessor.

The display PCB enables you to interface with the RF PCB. The display PCB drives the analog display, digital display, and light-emitting diodes (LEDs) in the user-interface push buttons. The display PCB also scans the push buttons to determine which button you have pressed.

Power- conditioning circuitry on the display PCB converts 12 VDC from the external supply to 5 VDC for the electronics on the two PCBs.

1.3 Product Safety

For safe operation, take the following precautions with the power meter:

- Use only a good-quality 50-ohm coaxial cable to connect the meter to both the RF source and the antennas, especially if the source's RF output level exceeds 200 W. Doing so minimizes cable loss, reduces the risk of dielectric breakdown, and minimizes radiation and electrical hazards.
- Use proper grounding throughout your installation.
- If possible, connect the meter to an AC power source that you can turn on and off. Then, when you are away from your station, you can turn the power source off and stop the meter's power cube from drawing power. Doing so is not only a safety measure but also an energy-conservation measure, and may extend the service life of the power cube.

1.4 Product Warranty

The original purchaser of this power meter is covered by a 12-month, limited factory warranty. For more information about the warranty, go to **rfconcepts.com**.

1.5 Product Assistance

Technical assistance from RF Concepts is available from several sources.

- Go to our website at **rfconcepts.com** and click **Support** for the following assistance:
  - — Alpha Forum
  - — FAQs
  - — Legacy equipment information
  - — Manuals
  - — Repair information
  - — Software downloads
  - — Tech tips
  - — Technical support
- E-mail us by completing a support request at **rfconcepts.com**.
- Fax us at **303-473-9660**.
- Phone us at **303-473-9232**.

1.6 Product Specifications

Listed below are the following specifications:

- Operational specifications
- Typical performance specifications
- Serial-interface specifications

Operational Specifications

The following table lists the power meter's operational specifications.

Table 1-2 Operational specifications for the Alpha 4500A series power meter

Parameter	Specification	Notes
Frequency of operation	1.75–55 MHz	Continuous coverage
Power range	0.3 W to 3 kW (4510A and 4505A) 0.5 W to 5 kW (4520A and 4515A)	
Minimum detectable power	<0.05 W (4510A and 4505A) <0.1 W (4520A and 4515A)	
Standard deviation of power accuracy	<2.5%	
Absolute power accuracy	<5% (<3% typical)	Compensated for temperature and frequency
Reference point	RF input port	Either RF connector can be the input port
Directivity and corresponding indicated SWR for ideal 50-ohm load	>24 dB <1.14	
Reference impedance	50 ohms	Custom models are available with other reference impedances
Maximum RF voltage	550 V_{rms}	Center conductor to shield
Maximum RF current	11 A_{rms}	
Operating temperature	–10º to +40º C	
Storage temperature	–40º to +50º C	
Insertion loss	<0.06 dB	Typically better than 0.015 dB (measured with type-N connectors installed) at 14 MHz
Return loss	<–26 dB	Typically better than –35 dB (measured with type-N connectors installed) at 14 MHz
RF connector types	Field-replaceable UHF (SO239) supplied; N-type available	
Digital data connector	USB	

Table 1-2 Operational specifications for the Alpha 4500A series power meter

Parameter	Specification	Notes
DC power requirement	10–14 VDC, <1 A	
Mating DC power connector with unshielded cable	Digikey PN-839-1015-ND	Outside sleeve is negative terminal
Input to external AC power supply	100–240 VAC, 50–60 Hz	
Size	8.6"W × 4.7"H × 3.2"D	
Weight	9.0 pounds	External power supply weights 0.7 pounds

Typical Performance Specifications

The following graphs show examples of measured performance.

Figure 1-4 Power error as a function of frequency with 0.3 W of forward power and SWR near unity

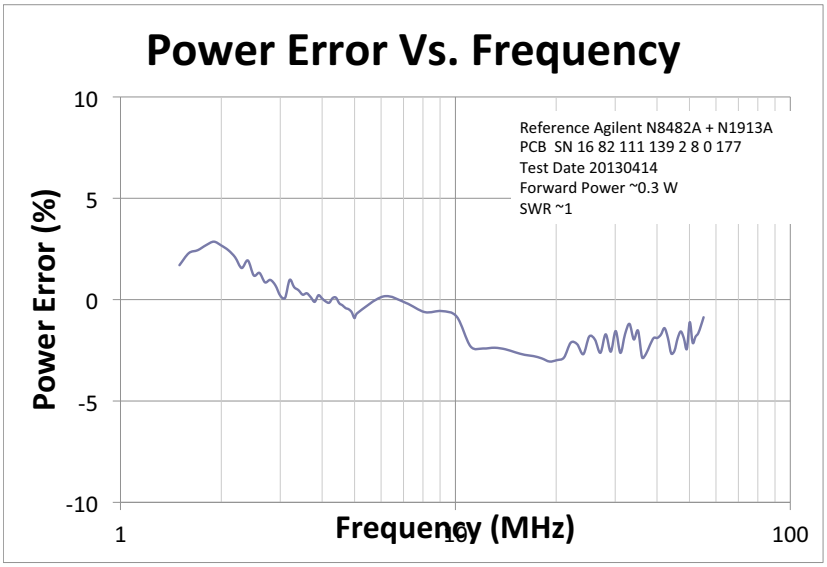

Figure 1-5 Power error as a function of power at 14.1 MHz with SWR near unity

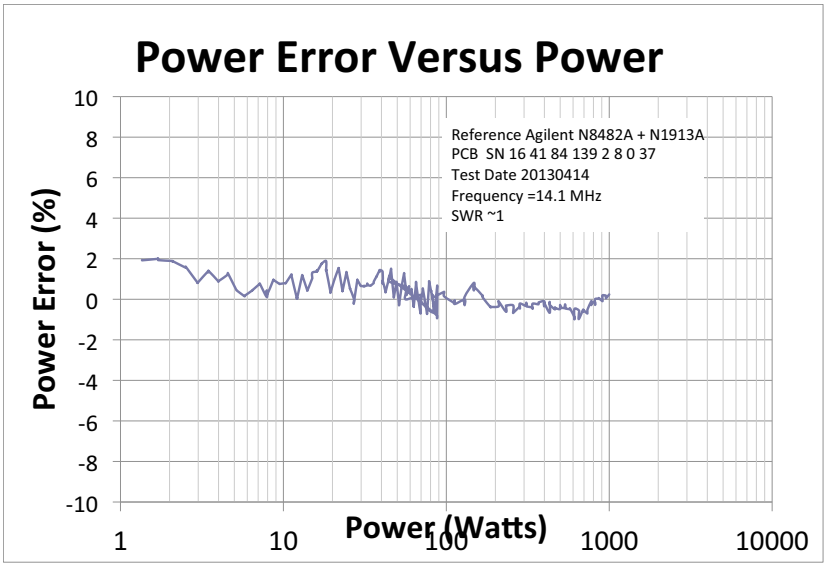

Figure 1-6 Insertion loss as a function of frequency

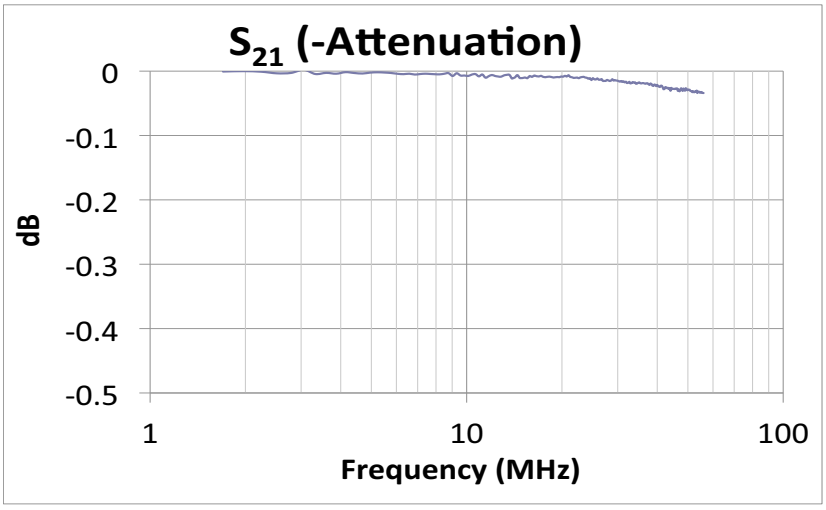

Figure 1-7 Return loss as a function of frequency

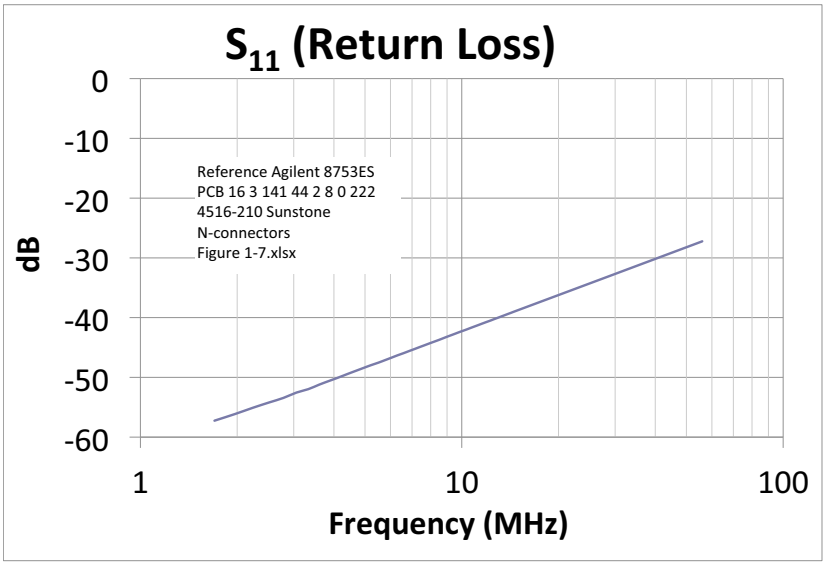

Serial-Interface Specifications

The serial port continuously outputs data at 38,400 bps using 8 data bits, 1 stop bit, and no parity (N,8,1). All characters are human-readable; that is, they are displayed as ASCII text if directed to a terminal-display program such as HyperTerminal or RealTerm in Microsoft Windows.

A complete set of data output for one measurement, in either of the two RF operating modes (PEP or carrier/tune), consists of a so-called data "sentence." Each sentence contains a start or sentinel character ($), an end character (*), and two additional characters (FF). Sentences are separated by a <carriage return> and <line feed>.

Each sentence consists of seven words, separated by commas. The first word in a sentence consists of the start character <$> followed by the letters <APW> and a numerical set, either <01> (RF operating mode = carrier/tune) or <02> (RF operating mode = PEP).

A typical first word in a sentence is as follows, including the comma separator:

```
$APW01,
```

The next five words represent the following five data fields, separated by commas:

- Forward power (watts)
- Reflected power (watts)
- SWR
- Temperature (°F) — the internal temperature of the unit and NOT ambient or room temperature; used for temperature compensation

- Estimated frequency (MHz) — accurate only to +/–2%; used for frequency compensation

NOTE: Delivered power is a derived value, not a measured value. It is calculated as the difference between forward and reflected power for any given measurement.

A typical string of words following the first word is as follows, including comma separators:

```
0.240197,0.031695,2.140988,77.900000,3.482099
```

This string represents the following data:

- Forward power = 0.240197 W
- Reflected power = 0.031695 W
- SWR = 2.140988
- Temperature = 77.900000 °F
- Frequency = 3.482099 MHz

The final word of every sentence is indicated by a <*> character followed by two additional characters that currently are fixed as <FF>. Thus, the final word in every sentence should appear as follows:

```
*FF
```

Immediately after completing the final word in a sentence, the meter sends a carriage return and line feed. On a Hyperterm screen, the cursor drops down one line, and the next character is then the sentinel character <$>, indicating the first word of the next sentence.

The rate at which the sentences are emitted depends on the RF operating mode. They are more rapid in carrier/tune mode than in PEP mode.

Following are two examples of complete sentences.

Example 1

```
$APW01,0.240459,0.031606,2.137487,78.012496,3.491939,*FF
```

RF operating mode = Carrier/tune
Forward power = 0.240459 W
Reflected power = 0.031606 W
SWR = 2.137487
Temperature = 78.012496°F
Frequency = 3.491939 MHz

Example 2 `$APW02,0.256680,0.033417,2.129019,78.012496,4.533681,*FF`

RF operating mode = PEP
Forward power = 0.256680 W
Reflected power = 0.033417 W
SWR = 2.129019
Temperature = 78.012496 °F
Frequency = 4.533681 MHz

2 Power-Meter Components

2.1 (Models 4510A/4520A) Analog Meter and Digital LED Display 2–2
2.2 (Models 4510A/4520A) Control Switches 2–3
2.3 SoftMeter Software 2–4
2.4 Rear-Panel Connectors 2–5

IMPORTANT

Do not open the power meter. There are no internal controls or user-serviceable parts inside any Alpha 4500A series power meters.

Opening the unit voids the manufacturer's warranty. Any damage or problems resulting from opening the unit are not covered by warranty.

Opening the unit may also result in inaccurate readings and partial or total electrical failure of the unit.

As discussed in Section 1.1, "Display method," page 1–3, the four power-meter models vary in their display method:

- Models 4505A/4515A display data only via SoftMeter software. They do not have built-in displays.
- Models 4510A/4520A display data via SoftMeter software and, in addition, via a front-panel analog meter and digital LED display. Numerous control switches control meter operation and display, as discussed below.

  The front panels of models 4510A and 4520A are similar. The front panel of model 4520A is shown in Figure 2-1.

Figure 2-1 Power-meter front panel

2.1 (Models 4510A/4520A) Analog Meter and Digital LED Display

Power-meter models 4510A/4520A have two built-in physical displays that enable you to view meter measurements (see Table 2-1).

Table 2-1 Power-meter models 4510A/4520A physical displays

Display	Purpose
Analog meter	Displays the following: • On the upper and middle scales, either forward power or reflected power (depending on the setting of the **Fwd** and **Ref** switches) • On the bottom scale, SWR Note: The analog meter does not display delivered power.
Digital LED display	Displays either forward power or delivered power (depending on the setting of the **Del** switch). Note: **Del** stands for delivered power, defined as forward power minus reflected power.

2.2 (Models 4510A/4520A) Control Switches

For power-meter models 4510A/4520A, all functions and modes are accessible from the front panel by means of 16 control switches (see Table 2-2). Each switch has an indicator light that displays its status.

Table 2-2 Power-meter control switches

Switch	Purpose
Top Row (left to right)	
• **Fwd**	Causes the analog meter to display forward power.
• **Ref**	Causes the analog meter to display reflected power.
• **SWR**	Causes the analog meter to display SWR.
• **PEP**	Toggles the RF operating mode between PEP and carrier/tune (non-PEP). For more information on RF operating modes, see Section 4.4, "Determine the Measurement Modes," page 4–3.
• **Del**	Toggles the digital LED display between forward power and delivered power. Note: **Del** stands for delivered power, defined as forward power minus reflected power.
Bottom Row (left to right)	
• **A series of 9 switches, labeled as follows:** – **Model 4520A: 10 to 5000** – **Model 4510A: 0.3 to 3000**	Puts the meter in manual-select power-segment-selection mode, causing it to lock into one of nine power-segment scales for displaying forward or reflected power. If you do not select one of these switches, the meter operates in AutoSense mode. If you do select one of these switches, the meter operates in manual-select mode, locking into the selected power segment. If the applied power exceeds the full-scale reading for the selected segment, no damage occurs to the meter.
• **Auto**	Puts the meter in AutoSense power-segment-selection mode, causing it to automatically match the analog meter to the appropriate power segment.
• **On/Off**	Powers the meter on and off.

NOTE

The default settings upon initial powerup are the following:

- RF operating mode: PEP
- Power-segment-selection mode: AutoSense
- Analog-meter display: SWR
- Digital LED display: Delivered power

2.3 SoftMeter Software

SoftMeter is a PC application that monitors all meter functions simultaneously. All models of the Alpha 4500A series power meter ship with SoftMeter software. For models 4505A/4515A, meter readings are available only via the SoftMeter software.

All of the information that the meter measures is available via the USB serial port on the back of the unit. The format of the data provided over the port is described in Section 1.6, “Serial-Interface Specifications,” page 1–12. Instructions for installing the software are provided in Section 3.2, 3.2, “(Optional) Set Up the Host PC and SoftMeter Software,” page 3–2.

Currently, no serial commands can be sent to the unit via the serial port.

IMPORTANT

Support for configuring and running SoftMeter software is the sole responsibility of the purchaser. Due to the ever-changing number of PC hardware and software configurations, we cannot support each user in configuring his or her PC to correctly run the SoftMeter software.

The SoftMeter software interface (Figure 2-2) is similar to the physical displays on power-meter models 4510A/4520A.

Figure 2-2 Alpha 4500A SoftMeter screen

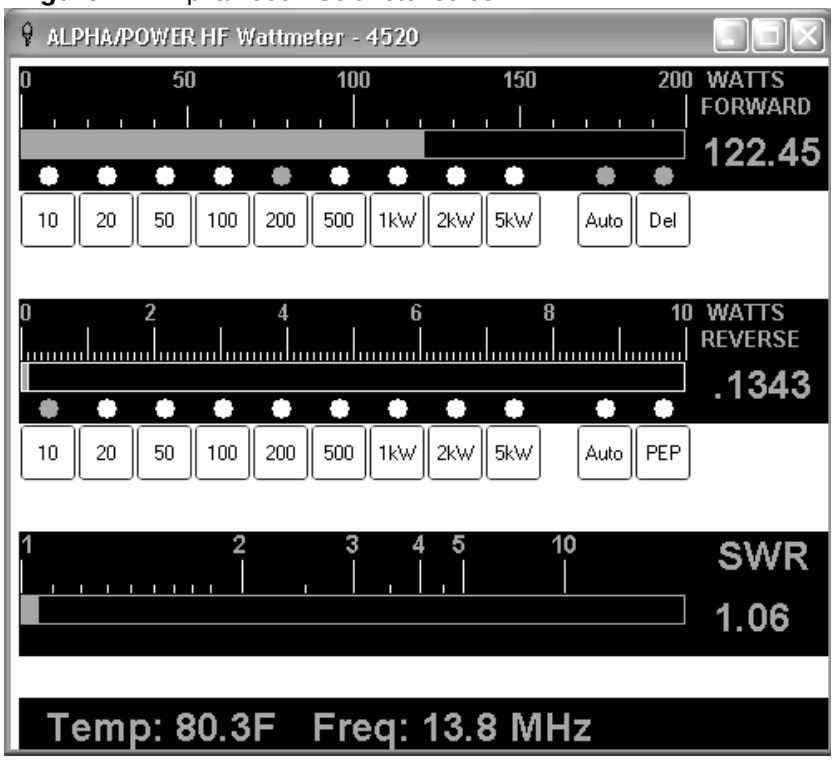

2.4 Rear-Panel Connectors

The rear panel of each power-meter model contains the following (none of them user-adjustable):

- Power-supply input connector (12 VDC) and USB connector for serial-data output (upper left)
- USB connector for serial-data output (upper left)
- Input and output RF coax connectors (along the bottom)
- Label showing the model and serial number and other relevant information (center)

3 Setting Up the Power Meter

3.1 Position the Meter 3–1
3.2 (Optional) Set Up the Host PC and SoftMeter Software 3–2
3.3 Connect the Cables 3–3
3.4 (SoftMeter Users) Configure the PC's USB COM Port 3–5
3.5 (Optional) Change the RF Coaxial Connectors 3–5

3.1 Position the Meter

Procedure 3-1 Position the meter

Step 1 Unpack the meter and place it so as to ensure the following:

- The surface is level.
- An appropriate AC power source is accessible.

  HINT: If you anticipate being away from your station for any period of time, we suggest that you use an AC power source that can be turned on and off. Even when the meter is turned off, if the power source is on, the meter's power supply draws power and provides 12 V to the meter. Using a separately controllable power source can thus conserve energy and enhance safety, and may extend the service life of the meter's power supply.
- The front of the meter is viewable and the control switches are accessible.

  NOTE: There are no user-adjustable controls on the rear panel. After the cables are connected, you will not need to access the back panel.

Step 2 (Models 4510A/4520A) Zero the analog meter:

2a Determine where the analog meter needle rests with respect to the zero value on the upper scale.

2b If necessary, zero the needle by carefully inserting a small jeweler's flathead screwdriver into the adjustment hole directly under the meter face and adjusting the needle.

3.2 (Optional) Set Up the Host PC and SoftMeter Software

NOTE: If you are not using SoftMeter software, skip this section.

All models of the Alpha 4500A series power meter ship with SoftMeter software. For models 4505A/4515A, meter readings are available only via the SoftMeter software.

IMPORTANT

Support for configuring and running SoftMeter software is the sole responsibility of the purchaser. Due to the ever-changing number of PC hardware and software configurations, we cannot support each user in configuring his or her PC to correctly run the SoftMeter software.

Procedure 3-2 Set up the host PC and SoftMeter software

Step 1 Set up a host PC with the following:

- Operating system: a relatively current Microsoft operating system
- Capacity: 10 MB free hard-disk space, 256 MB RAM
- Port: an available USB serial port

Step 2 Install the SoftMeter software.

NOTE:

- For models 4510A/4520A, this step is optional.
- For models 4505A/4515A, this step is required.

2a On the host PC, navigate to the directory in which you want the SoftMeter software to run.

2b Unzip the SoftMeter software.

2c Open the README file and follow the instructions therein.

3.3 Connect the Cables

Procedure 3-3 Connect the cables

Step 1 Ensure that your installation is properly grounded.

Step 2 If you are using SoftMeter software, connect the meter to the host PC.

Use a USB cable to connect the PC's USB port to the meter's USB port. The connector sends engineering information calculated by the meter — including power output levels, reflected power level, and SWR — as a serial data stream in USB format to the host PC. For the format of the data stream, see Section 1.6, "Serial-Interface Specifications," page 1–12.

Step 3 Connect the meter to the power supply.

3a Plug the power supply into the meter:

1. Locate, on the power supply, a two-wire cable with a small barrel connector on the end.
2. Locate, on the back of the meter, a recessed male barrel-connector receptacle labeled 12 VDC.
3. Plug the cable into the receptacle.

The power supply operates from a 100–240-V 50–60-Hz AC power source.

IMPORTANT

The power supply provides DC output. Therefore, the power supply's power cable and barrel connector as well as the meter's recessed male connector are polarized.

Although the meter is protected against reverse-polarity connection, do not tamper with or change the power-supply cable or the barrel connector. Any such tampering or change can lead to damage or failure of the meter. **Such damage or failure is not covered under warranty.**

3b Plug the power supply into an AC power source.

3c (Models 4510A/4520A) Power up the meter by momentarily pressing the **ON/OFF** button.

The following sequence occurs on these models:

1. The switch lights, confirming that the meter is powered on.
2. A self-test sequence briefly lights each of the switches.
3. If no RF power is present, the digital LED display shows a number in the range 0000–0003.
4. The analog meter lights up.
5. The meter makes a short audible tone.

NOTE: For models 4510A/4520A, the default settings upon initial powerup are as follows:

- RF operating mode: PEP
- Power-segment-selection mode: AutoSense
- Analog-meter display: SWR
- Digital LED display: Delivered power

Step 4 Connect the meter to the RF source (transmitter) and load (antennas) to be measured.

NOTE: The meter is normally supplied with ultra-high-frequency (UHF) style (or SO-239) coaxial connectors — for example, they mate with PL-259 plugs — or optionally with N-type connectors. However, the connectors are field-replaceable if you prefer a different style of connector (BNC or type N) or if the connectors become damaged. For more information, contact the factory. There is no requirement that both connectors be of the same type.

If you replace a coaxial cable, use only good-quality 50-ohm cable to connect the meter to both the RF source and the load.

4a Locate, on the back of the meter, the two RF connectors.

4b To the two connectors, securely attach the following:

- Load (output): the 50-ohm coaxial cable from the antenna (or from a separate antenna switch if one is used to select from among various antennas)
- Source (input): the 50-ohm coaxial cable from the output stage of the HF amplifier or transceiver

NOTE: The meter automatically senses the direction of RF flow through the meter, so you can attach the load and source interchangeably to either of the two connectors. However, factory calibration is performed with the load attached to the RF connector nearer the USB connector, and therefore better accuracy is expected with this configuration.

In connecting the load and source, it is good practice to do the following:

- Use only high-quality coaxial cable for all RF connections.
- Keep the cable length as short as practical to reduce line loss.
- Whenever you mate the coaxial plugs to the meter's coaxial connectors, carefully inspect, tighten, and, as needed, clean the plugs to ensure long life for the connectors.

For standard SO-239 UHF-style connectors, inspect the male PL-259 connectors on the end of the coaxial cable before mating them with the connectors on the back of the meter. Use a fine-grade file to remove any excess solder and remnants of solder flux on the center pin.

3.4 (SoftMeter Users) Configure the PC's USB COM Port

NOTE: If you are not using SoftMeter software, skip this section.

Procedure 3-4 Configure the USB COM port

Step 1 On the host PC, click **Start**.

Step 2 Search for and open Device Manager, then open Ports (COM & LPT).

Procedures for doing so can vary according to operating system. A typical sequence is to right-click **Computer**, then select **Properties > Hardware > Device Manager > Ports (COM & LPT)**.

Step 3 Right-click the COM port number that the system has assigned to the meter and left-click **Properties**.

Step 4 Click the Port Settings tab and set the following values:

- Bits per second: 38400
- Data bits: 8
- Parity: None
- Stop bits: 1
- Flow control: None

Step 5 Click **Advanced** and set the COM port number to the port that you wish to use (COM1 to COM8).

Step 6 Click **OK** to close all windows, then exit Device Manager.

3.5 (Optional) Change the RF Coaxial Connectors

The RF coaxial connectors are field replaceable. If the connectors become damaged or if different-style connectors are to be installed, you can replace them easily in the field.

IMPORTANT

Do not open the power meter. There are no internal controls or user-serviceable parts inside any Alpha 4500A series power meters.

Opening the meter voids the manufacturer's warranty. Any damage or problems resulting from opening the meter are not covered by warranty.

Opening the meter may also result in inaccurate readings, reduced accuracy, and partial or total electrical failure of the unit.

Procedure 3-5 (Optional) Change the RF coaxial connectors

Step 1 Disconnect all electrical cables from the meter.

Step 2 Turn the meter face-down on a soft surface, tilting it so that it rests on the carrying handles.

Step 3 With a #2 Phillips screwdriver, unscrew and remove the four stainless-steel machine screws and lock washers for each connector to be removed.

Set the screws and washers aside. If one is lost, replace it with an identical stainless-steel screw and lock washer.

Step 4 Remove the connector by drawing it straight up away from the meter, using slight force if necessary to remove it from its socket connection on the meter's printed circuit board (PCB).

Step 5 Using a flashlight, inspect the mating contact for the connector center pin and the chassis area around the connector. If necessary, clean these surfaces using a Q-tip and alcohol.

Step 6 Install the new connector by pressing it gently into the socket connection on the meter's PCB. The connector should fit snugly into the PCB.

Step 7 Align the screw mounting holes of the new connector with the holes in the back of the meter.

Step 8 Secure the new connector using the factory-supplied screws (stainless-steel machine-type 8-32 x 5/16"). Ensure that the screws are tight before applying RF power.

4 Operating the Power Meter

4.1 Power the Meter Up/Down 4–1
4.2 Connect the Meter to the RF Source and Load to Be Measured 4–2
4.3 Determine What to Measure 4–2
4.4 Determine the Measurement Modes 4–3
4.5 (SoftMeter Users) Read Measurements on the Software Display 4–5
4.6 (Models 4510A/4520A) Read Measurements on the Physical Displays 4–7
4.7 (Models 4510A/4520A) Enter/Exit Sleep Mode 4–8

IMPORTANT

- The Alpha 4500A series power meter is designed to be easy to set up, operate, and maintain. However, failure to carry out each procedure exactly as described in this manual is likely to lead to meter damage. **Such damage is not covered under warranty.** Damage to other station equipment may also result.
- If the meter faults during operation, resolve the fault as described in Chapter 5, “Troubleshooting the Power Meter.”

4.1 Power the Meter Up/Down

Procedure 4-1 Power the meter up or down

Step 1 To power the meter up:

- (Models 4515A/4505A) Connect the meter to the power supply and the power supply to an AC outlet.
- (Models 4510A/4520A) Connect the meter to the power supply and the power supply to an AC outlet. Then momentarily press the **ON/OFF** button.

  The following startup sequence occurs (models 4510A/4520A):

  1. The switch lights, confirming that the meter is powered on.
  2. A self-test sequence briefly lights each switch.
  3. If no RF power is present, the digital LED display shows a number in the range 0000–0003.

4. The analog display lights up.
5. The meter makes a short audible tone.

NOTE: For models 4510A/4520A, the default settings upon initial powerup are the following:

- RF operating mode: PEP
- Power-segment-selection mode: AutoSense
- Analog-meter display: SWR
- Digital LED display: Delivered power

Step 2 To power the meter down:

- (Models 4510A/4520A) Momentarily press the **ON/OFF** button.
- (Models 4505A/4515A) Disconnect the meter from the power supply or the power supply from the AC outlet.

4.2 Connect the Meter to the RF Source and Load to Be Measured

Ensure that the meter is connected to the RF source and load to be measured as described in Section 3.3, "Connect the Cables," Step 4, page 3–4.

4.3 Determine What to Measure

You can measure the following with the power meter:

NOTE: The following text is taken from Section 1.1, "Product Capabilities," page 1–1.

- *Forward power* — This is the power traveling in the forward direction, from the transmitter to the load (typically the coaxial transmission line leading to the antenna). For the ideal case of unity SWR (SWR = 1), this is also the power delivered by the transmitter to the load.
- *Reflected power* — This is the power traveling in the reverse direction, from the load to the transmitter. For the ideal case of unity SWR, the reflected power is zero.
- *Delivered power* — This is the forward power *minus* the reflected power — in other words, the power delivered by the transmitter to the load regardless of SWR value. For example, if the forward power is 100 W and SWR = 4, then the reflected power is 36 W and the delivered power (power delivered by the transmitter to the load) is 64 W.

- *Standing-wave ratio (SWR)* — Forward-traveling and reverse-traveling (reflected) voltage waves exist on the coaxial transmission line. Large voltages can exist on the transmission line at places where these two voltages are in phase and coherently *add*. Small voltages can exist on the transmission line at places where these two voltages are out of phase and coherently *subtract*.

  SWR is defined as the ratio of the maximum possible voltage to the minimum possible voltage:

  SWR = $(V_f + V_r) / (V_f - V_r)$

  where V_f and V_r are the magnitudes of the forward- and reverse-traveling voltage waves, respectively.

  For example, if $V_f = 100$ V and $V_r = 50$ V, the largest possible voltage is 150 V and the smallest possible voltage is 50 V. So SWR = 150 / 50 = 3. Further, the forward power is 200 W, the reflected power is 50 W, and the delivered power is 150 W.

  In the ideal case, SWR = 1 and the coaxial transmission operates with minimum loss.

HINT

(Models 4510A/4520A) We recommend that you use the dual analog/digital display to view two readings simultaneously — SWR on the analog meter and forward or delivered power on the digital LED display. In this way, you can verify that both the RF source and the RF load are operating correctly.

4.4 Determine the Measurement Modes

Before you make measurements, you should determine the following:

- Which RF operating mode to use
- Which power-level mode to use

RF Operating Mode

You can set the RF operating mode to either PEP (default) or carrier/tune (non-PEP).

PEP Mode (Default)

In PEP mode, the meter measures 497 discrete samples, then uses the 6 highest values to calculate the average value for a given reading.

Use this mode for normal operation *after* station tuneup. Use it, too, for most peak-power measurements of continuous-wave (CW) Morse code, radio teletype (RTTY), and single-sideband (SSB) signals.

Carrier/Tune (Non-PEP) Mode

In carrier/tune mode, the meter measures 32 discrete samples and uses all of them to calculate the average value for a given reading.

Use this mode for *laboratory-quality* measurements in a constant-signal or key-down operating scenario when you set up a station or antenna; evaluate SWR; tune an exciter, amplifier, or antenna; or match an output stage to an antenna using an antenna-matching network.

Power-Level Mode

You can set the power-level mode to either AutoSense (default) or any of nine manual-select choices.

NOTE: This mode selection affects operation of the analog meter only.

AutoSense Mode (Default)

The **Auto** switch on the front panel to the right of the nine power-segment switches puts the meter in AutoSense mode.

In this mode, the meter automatically switches among power segments to best match the measured power level. The switch for each power segment lights or darkens as the meter detects or ceases to detect power levels within that segment.

This mode has both practical and reliability benefits:

- It keeps the analog meter's deflection roughly in the center third of the scale, for more accurate readings and reduced overall needle movement.
- It has a built-in response delay. If power falls to lower than full-scale value of a lower scale, the meter pauses at the current scale for about 2 seconds, then drops to the lower scale. Thus, if power level varies, such as during SSB radio communication, the meter does not bounce between scales.

Manual-Select Mode

The nine power-segment switches put the meter in manual-select mode. You can also press the **Auto** switch, if it is already lit, to accomplish the same thing; after you do so, if you do not then select a power segment, the meter returns to the last segment used in AutoSense mode.

In manual-select mode, you can lock the analog meter into one of nine power ranges. This is most useful when you are confident of the expected power level to be measured and want the needle deflection to stay within a certain part of the measurement scale.

You can move from one power segment to another just by pressing the switch for the new segment; you need not press the switches sequentially. If you overshoot or undershoot and select a power range that is larger or smaller than the RF presence on the coaxial line, the meter simply reads zero or full scale; no damage is done. For example, if the meter is

measuring forward power and you select 0.3 W but 3 KW of RF power is applied, the analog meter reads full scale. The digital LED display continues to show the accurate RF output level.

4.5 (SoftMeter Users) Read Measurements on the Software Display

NOTE: If you are not using SoftMeter software, skip this section.

For all power-meter models, you can read the power levels and SWR via the SoftMeter software. For models 4510A/4520A, you can also read the measurements via the physical displays. For models 4505A/4515A, which lack physical displays, you can read the measurements only via the SoftMeter software.

The SoftMeter software display (Figure 4-1) is similar to the physical displays on models 4510A/4520A.

Figure 4-1 SoftMeter software display

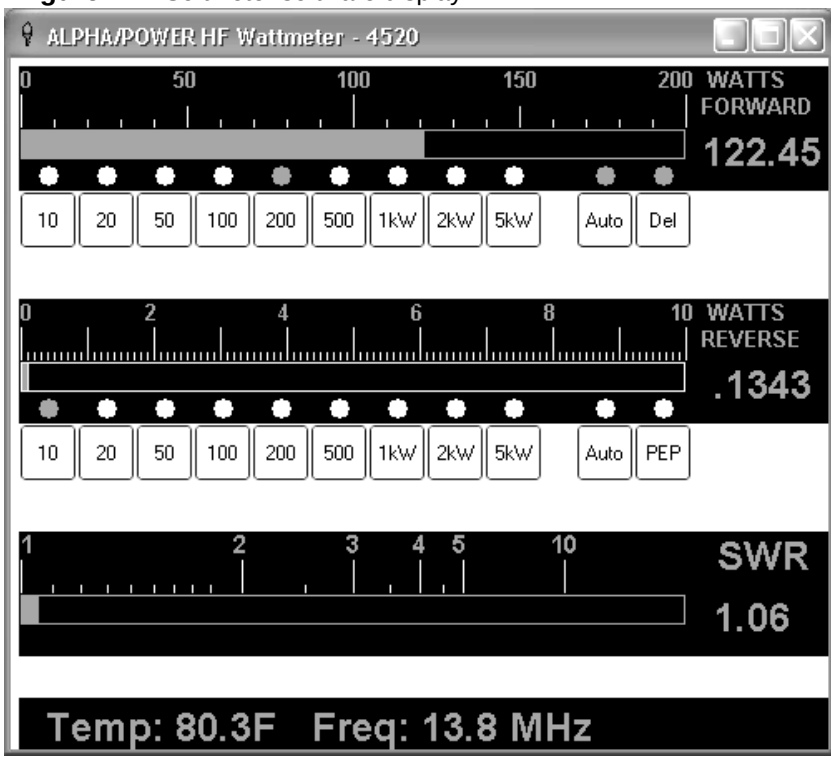

Procedure 4-2 Read measurements on the software display

Step 1 Select the RF operating mode by clicking **PEP** to toggle between the following:

- PEP (switch is on)
- Carrier/tune (switch is off)

Step 2 Select the power-level mode by clicking either of the following:

- **Auto** for AutoSense mode
- A specific power-segment switch:
  - — For model 4520A, 10 W to 5 kW
  - — For model 4510A, 0.3 W to 3 kW

Step 3 Read the power levels or SWR as follows (see Table 4-1).

Table 4-1 Reading measurements on the physical displays

For this measurement...	Click...	And read the measurement here...
Forward power	**Del** until NOT lit	Top row of the screen display
Delivered power	**Del** until lit	
Reflected power	—	Middle row of the screen display
SWR	—	Bottom row of the screen display

4.6 (Models 4510A/4520A) Read Measurements on the Physical Displays

For power-meter models 4510A/4520A, you can read the power levels and SWR not only via the SoftMeter software but also via the physical displays (Figure 4-2).

Figure 4-2 Models 4510A/4520A: physical displays

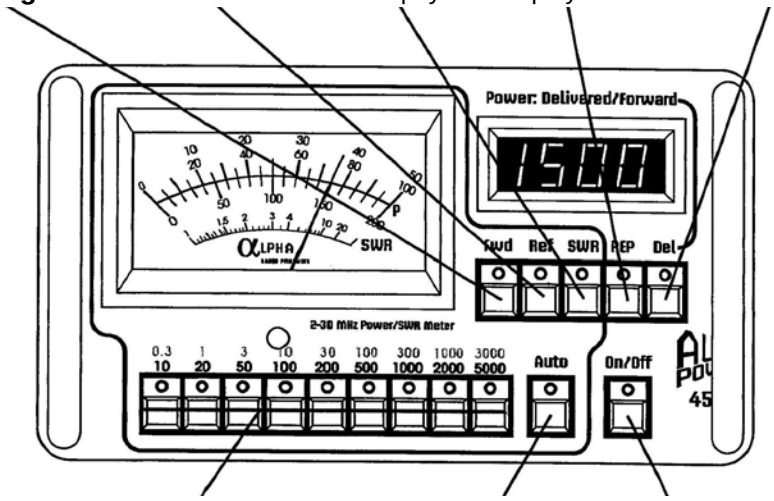

Procedure 4-3 (Models 4510A/4520A) Read measurements on the physical displays

Step 1 Select the RF operating mode by pressing the **PEP** switch to toggle between the following:

- PEP (switch is lit)
- Carrier/tune (switch is not lit)

Step 2 Select a measurement mode for the analog meter (either SWR or Power) by momentarily pushing the SWR button to toggle between SWR (LED lit) and Power (LED dark).

If you select Power mode (LED dark), then select a power level by pressing the switch for one of the following:

- **Auto** for AutoSense mode
- A specific power-segment switch:
  - — Model 4510A: 0.3 to 3000
  - — Model 4520A: 10 to 5000

Step 3 Read the power levels or SWR as follows (see Table 4-2).

Table 4-2 Reading measurements on the physical displays

For this measurement...	Press...	And read the measurement here...
Forward power	**Fwd**	Analog meter's top or middle scales or digital LED display
Delivered power	**Del**	Digital LED display
Reflected power	**Ref**	Analog meter's top or middle scales
SWR	—	Analog meter's bottom scale

4.7 (Models 4510A/4520A) Enter/Exit Sleep Mode

Power-meter models 4510A/4520A feature a sleep mode. It operates as follows:

- When the meter detects no RF power on the coaxial line for the sleep-mode timeout period (3–6 minutes), it turns off the lights on the analog meter, the digital LED display, and all switches.
- When the meter detects RF power, it instantly awakens and turns all lights back on without user intervention. All modes that you set beforehand are restored.

You can wake the meter up manually by pressing any switch other than the **ON/OFF** button.

If you turn the meter off via the **ON/OFF** button or by disconnecting the power, the last-used modes are NOT preserved when you turn the meter back on. Rather, the meter returns to the default modes listed in Procedure 4-1, Step 2, page 4–2.

5 Troubleshooting the Power Meter

Meter does not power up	**CHECK:** Check the DC power supply and connector polarity. • If the power supply does not measure 12 VDC, replace it. • If the connector polarity (the connector on the rear of the meter is a 5.5 x 2.5 mm coaxial power jack) is not tip positive (+) and barrel negative (–), replace the power supply.
SWR values are consistently high	**CHECK:** Check the coax connectors and contact centers between the meter and the antenna/load for continuity, connection tightness, and integrity (lack of corrosion or damage). • If the connectors are of questionable integrity, try replacing all of them. • If the connectors are damaged, replace them. **CHECK:** Check the antenna switch for correct operation and correct antenna selection. • Make adjustments as needed.
SoftMeter display at high power is erratic	**CHECK:** Check the USB cable for shielding. • If it is not properly shielded, shield it. At higher RF power levels, RF power commonly couples into the USB cable that connects the meter to the computer. This coupled power can generate electrical noise that degrades the data stream to the computer and causes irrelevant or erroneous data to be displayed on the computer screen. **CHECK:** Check the station and PC grounding. • If both are not properly grounded, ground them.

Terminology

NOTE: For detailed explanations of the following terms, see various publications including the latest *American Radio Relay League (ARRL) Handbook*.

A

AB1 — Modulation class AB1. Class that provides good linearity in a push-pull configuration.

AC — Alternating current. Electric current whose magnitude and direction vary with time.

ALC — Automatic Level Control. Technology that automatically controls output power.

ampere — Unit of electric current (1 coulomb per second).

ARRL — American Radio Relay League. US national organization of amateur radio operators. For more information, go to **www.arrl.org**.

AWG — American wire gauge. Standard method of denoting wire diameter.

C

CW — Continuous wave. Electromagnetic wave of constant amplitude and frequency.

D

dB — Decibel. Logarithmic unit of relative power.

E

EBS — Electronic bias switching. A form of switching that increases negative grid 1 voltage in pauses in speech or between Morse code elements, resulting in reduced standing bias on the tube.

exciter — Radio that provides RF drive for the amplifier to operate. The transmitter portion of the transceiver.

F

FCC — Federal Communications Commission. For more information, go to **www.fcc.gov**.

FM — Frequency modulation. Modulation scheme in which information is conveyed over a carrier wave by variations in frequency.

FSK — Frequency-shift keying. Type of frequency modulation in which information is conveyed by shifts in the output frequency between predetermined values.

H

HF — High frequency. Radio frequency within the range 3–30 MHz.

HV — High voltage. Electrical circuit in which the voltage used presents risk of both electric shock and electrical arcing.

Hz — Hertz. One periodic event per second.

I

Ip — Idling plate current. Plate current measured when the amplifier is keyed and RF is not present.

K

key — Signal from the radio to the amplifier that instructs the amplifier to switch from RECEIVE to TRANSMIT mode because the radio is ready to generate RF power.

kV — Kilovolt. 1000 V.

kVA — Kilovolt–ampere.

kW — Kilowatt. 1000 W.

L

LED — Light-emitting diode. Semiconductor diode that emits incoherent narrow-spectrum light, providing a form of electroluminescence.

LV — Low voltage. Electrical circuit in which the voltage used presents risk of electric shock but only minor risk of electrical arcing.

M

mA — Milliampere. 10^{-3} ampere.

MHz — Megahertz. 10^{6} Hz.

O

OPR — Operate.

P

PCB — Printed circuit board. Board that mechanically supports and electrically connects electronic components.

PEP — Peak envelope power. Average power supplied to the antenna transmission line by a transmitter during one RF cycle at the crest of the modulation envelope under normal operating conditions.

PSK — Phase-shift keying. Digital modulation scheme in which information is conveyed by changes, or modulations, in the phase of a reference signal.

Q

QSK — Quick-shift keying. Digital modulation scheme in which the transmitter is on only for the duration of each dot or dash and switches to RECEIVE mode between each dot or dash, allowing the user to hear any signal being sent.

R

RCA — Radio Corporation of America. Also a type of interconnecting plug.

RF — Radio frequency. Frequency within the range 3 Hz to 300 GHz.

RG-x/x — Coaxial cable type.

RMS — Root mean square. Statistical measure of the magnitude of a varying quantity such as a wave.

RTTY — Radio teletype. Telecommunications system consisting of two or more teleprinters using radio as the transmission medium.

S

SSB — Single sideband. Modulation scheme that refines upon amplitude modulation.

SSTV — Slow-scan television. Picture-transmission method for transmitting and receiving static pictures via radio.

STBY — Standby. Mode in which an electronic appliance is turned off but under power and ready to activate on command.

SWR — Standing-wave ratio. Ratio of the maximum possible voltage (or current) to the minimum possible voltage (or current) on a transmission line.

T

T/R — Transmit /receive.

transceiver — Device that has both a transmitter and a receiver within the same circuitry or chassis.

U

UHF — Ultra-high frequency. Radio frequency within the range 300–3000 MHz (3 GHz).

US — United States.

V

VAC — Volts of alternating current.

VDC — Volts of direct current.

VHF — Very high frequency (30 to 300 MHz).

VSWR — Voltage standing-wave ratio. Example: If VSWR = 1.2:1, the maximum possible voltage on the transmission line is 1.2 times the minimum possible voltage on the transmission line.

Schematics

NOTE: The following pages contain detailed schematics for the Alpha 4500A series power meter.

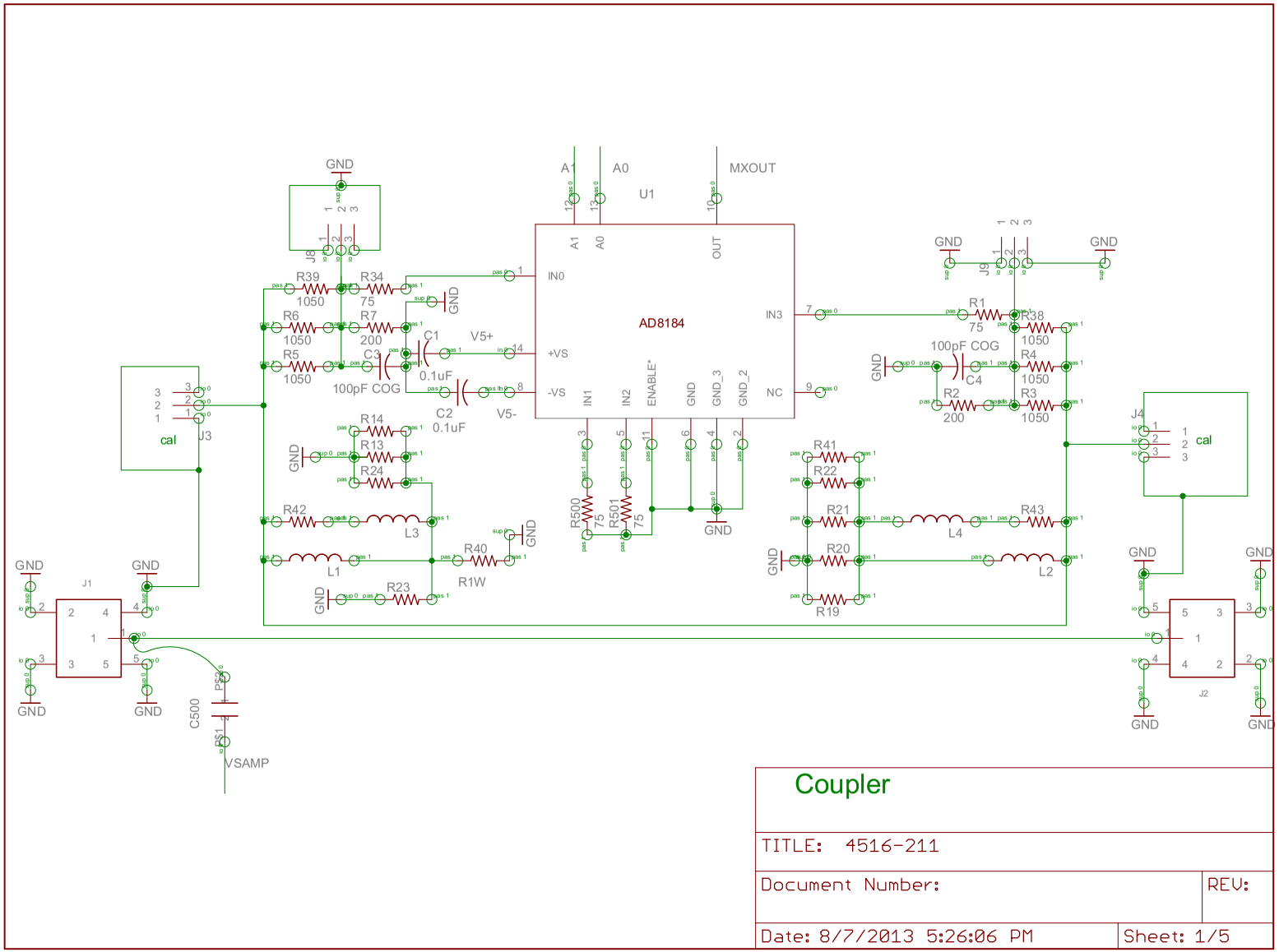

Coupler

TITLE: 4516-211	
Document Number:	REV:
Date: 8/7/2013 5:26:06 PM	Sheet: 1/5

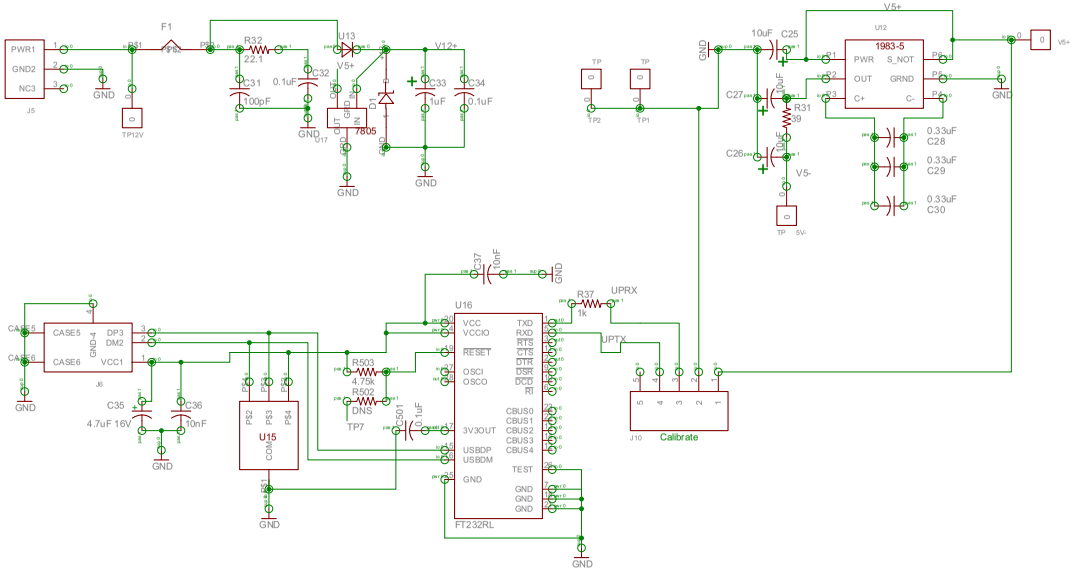

Power and Comms

TITLE: 4516-211

Document Number:

REV:

Date: 8/7/2013 5:26:06 PM

Sheet: 2/5

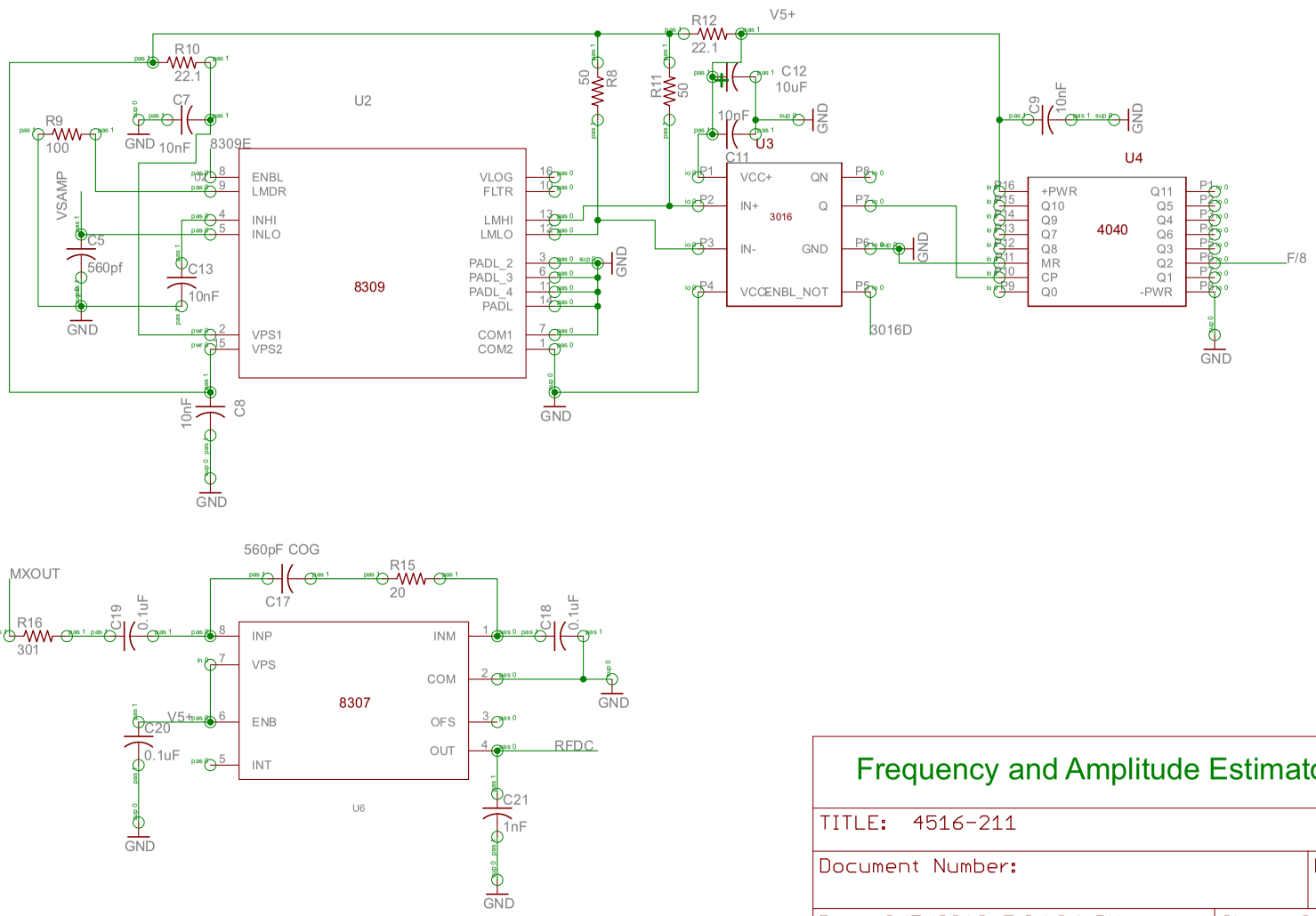

Frequency and Amplitude Estimator

TITLE: 4516-211	
Document Number:	REV:
Date: 8/7/2013 5:26:06 PM	Sheet: 3/5

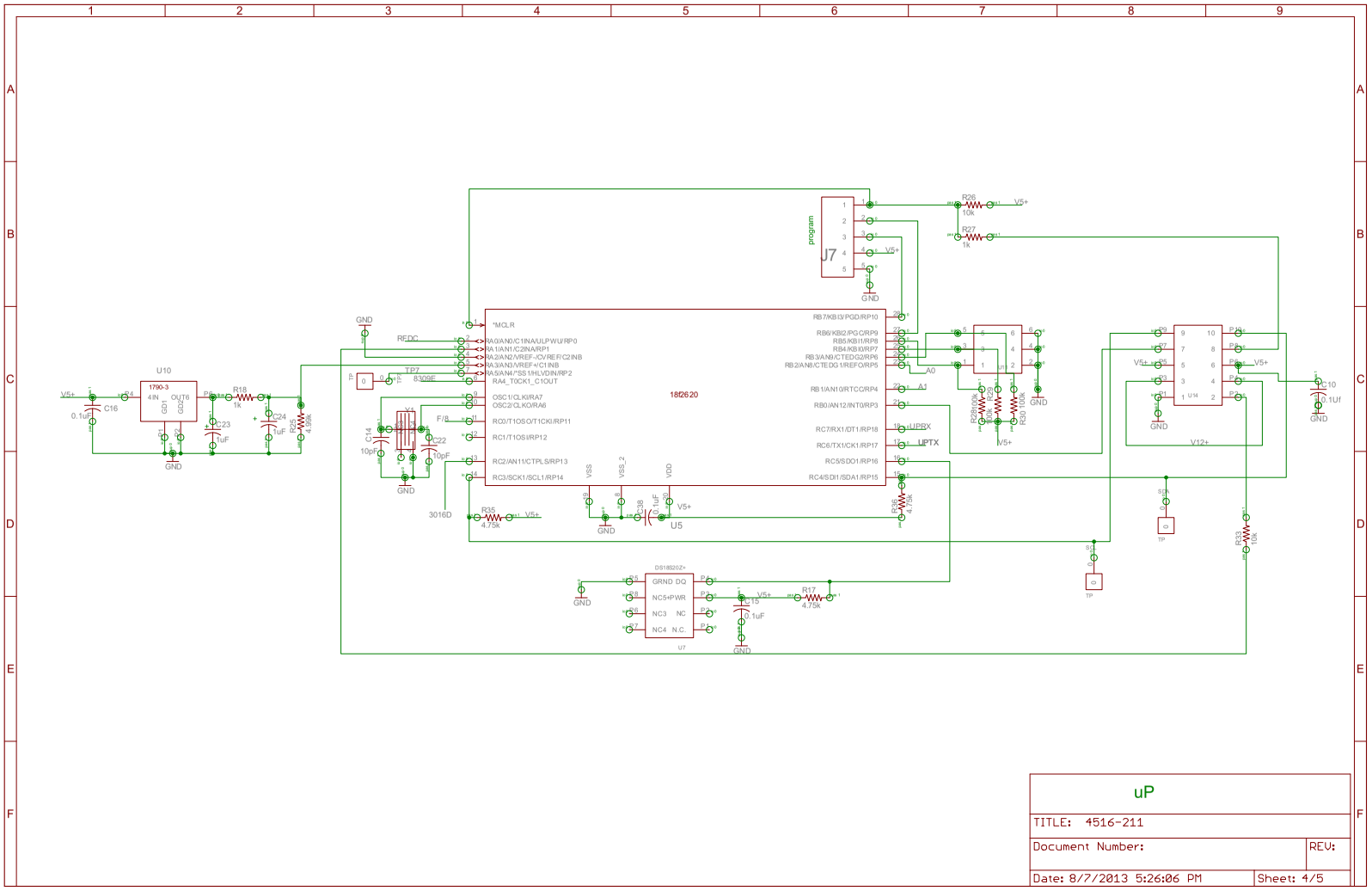

12/23/2014 2:14:45 PM f=0.63 C:\Prilab1\4516\4516-211\EAGLE\archive\4516-211.sch (Sheet: 4/5)

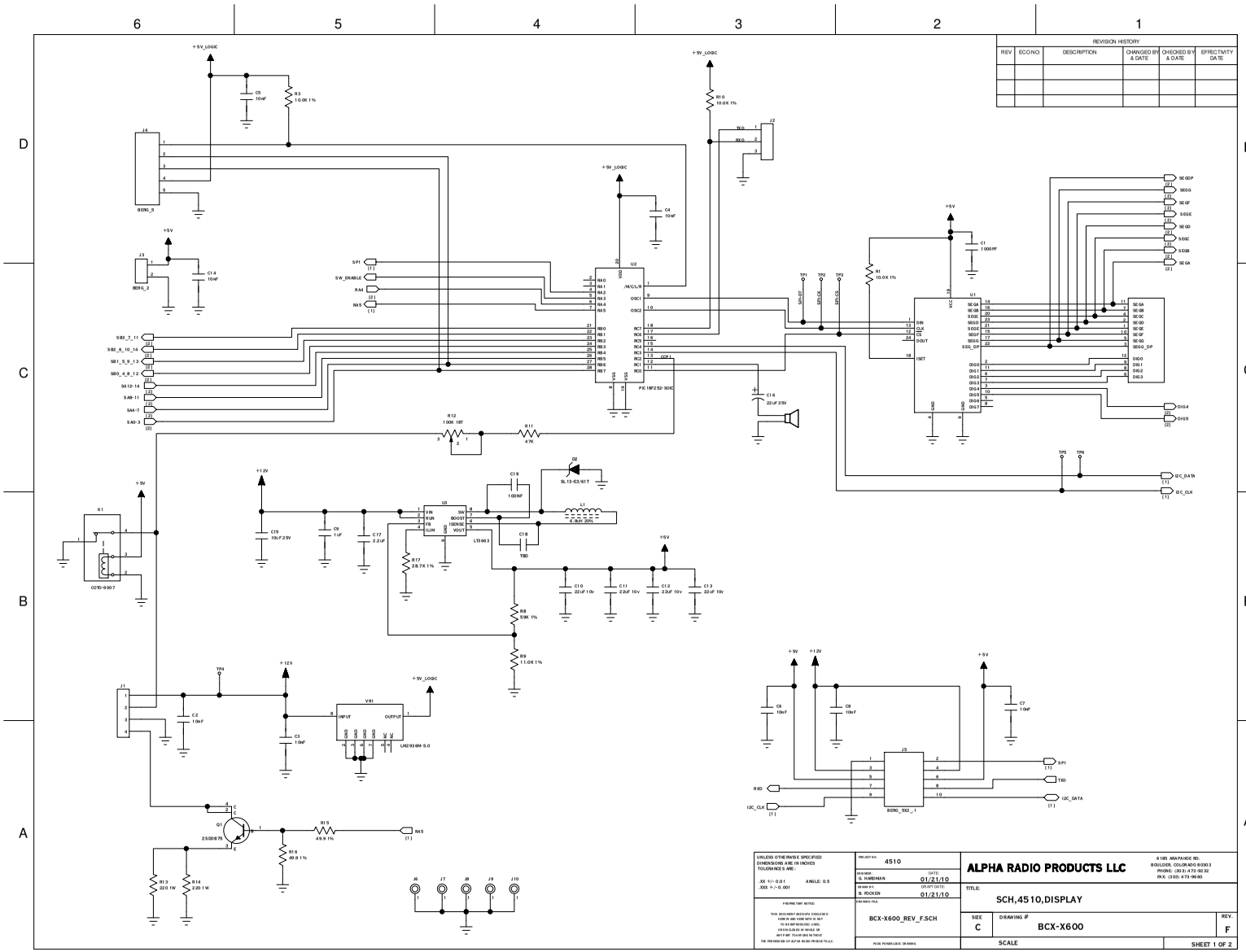

REVISION HISTORY
REV
ECO NO.
DESCRIPTION
CHANGED BY & DATE
CHECKED BY & DATE
EFFECTIVITY DATE
+5V_LOGIC
+5V
+12V
J4
BERG_5
J3
BERG_2
J2
U2
PIC18F252-SOIC
U1
SEGDP
SEGG
SEGF
SEGE
SEGD
SEGC
SEGB
SEGA
DIG4
DIG5
I2C_DATA
I2C_CLK
K1
OJTO-9007
U3
LT3663
D2
SL13-E3/61T
L1
6.8UH 20%
VR1
LM2936M-5.0
Q1
2SD0875
J1
J5
BERG_SX2_1
J6
J7
J8
J9
J10
UNLESS OTHERWISE SPECIFIED DIMENSIONS ARE IN INCHES TOLERANCES ARE:
.XX +/- 0.01
.XXX +/- 0.001
ANGLE: 0.5
PROJECT NO.
4510
DWG NO.
G. HARDMAN
DATE
01/21/10
DRAWN BY
B. ROCKEN
DRAFT DATE
01/21/10
DRAWING FILE
BCX-X600_REV_F.SCH
PLUS POWER LOGIC DRAWING
ALPHA RADIO PRODUCTS LLC
6185 ARAPAHOE RD.
BOULDER, COLORADO 80303
PHONE: (303) 473-9232
FAX: (303) 473-9990
TITLE:
SCH,4510,DISPLAY
SIZE
C
DRAWING #
BCX-X600
REV.
F
SCALE
SHEET 1 OF 2

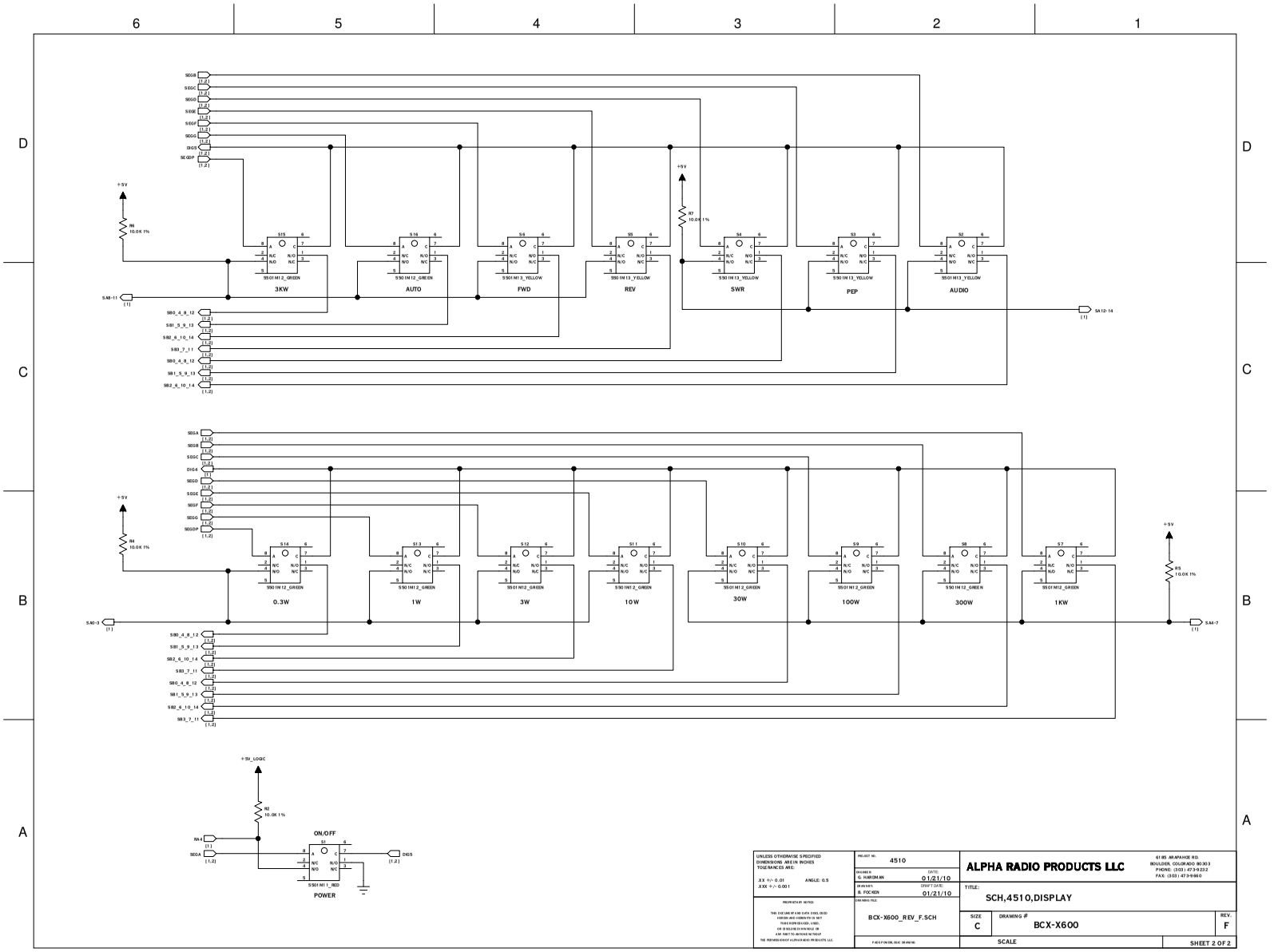

UNLESS OTHERWISE SPECIFIED
DIMENSIONS ARE IN INCHES
TOLERANCES ARE:

.XX +/- 0.01 ANGLE: 0.5
.XXX +/- 0.001

PROPRIETARY NOTICE:

THIS DOCUMENT AND DATA EXCLUDED HEREIN AND HEREWITH IS NOT TO BE REPRODUCED, USED, OR DISCLOSED IN WHOLE OR ANY PART TO ANYONE WITHOUT THE PERMISSION OF ALPHA RADIO PRODUCTS LLC.

PROJECT NO.	4510
ENGINEER	G. HARDMAN
DATE	01/21/10
DRAWN BY	B. FOCKEN
DRAFT DATE	01/21/10
DRAWING FILE	BCX-X600_REV_F.SCH
PAGE FOR DIVISION DRAWING	

ALPHA RADIO PRODUCTS LLC

6185 ARAPAHOE RD.
BOULDER, COLORADO 80303
PHONE: (303) 473-9232
FAX: (303) 473-9660

TITLE: SCH,4510,DISPLAY

SIZE	DRAWING #	REV.
C	BCX-X600	F

SCALE

SHEET 2 OF 2