CMOS SUPER KEYER III - Schematic

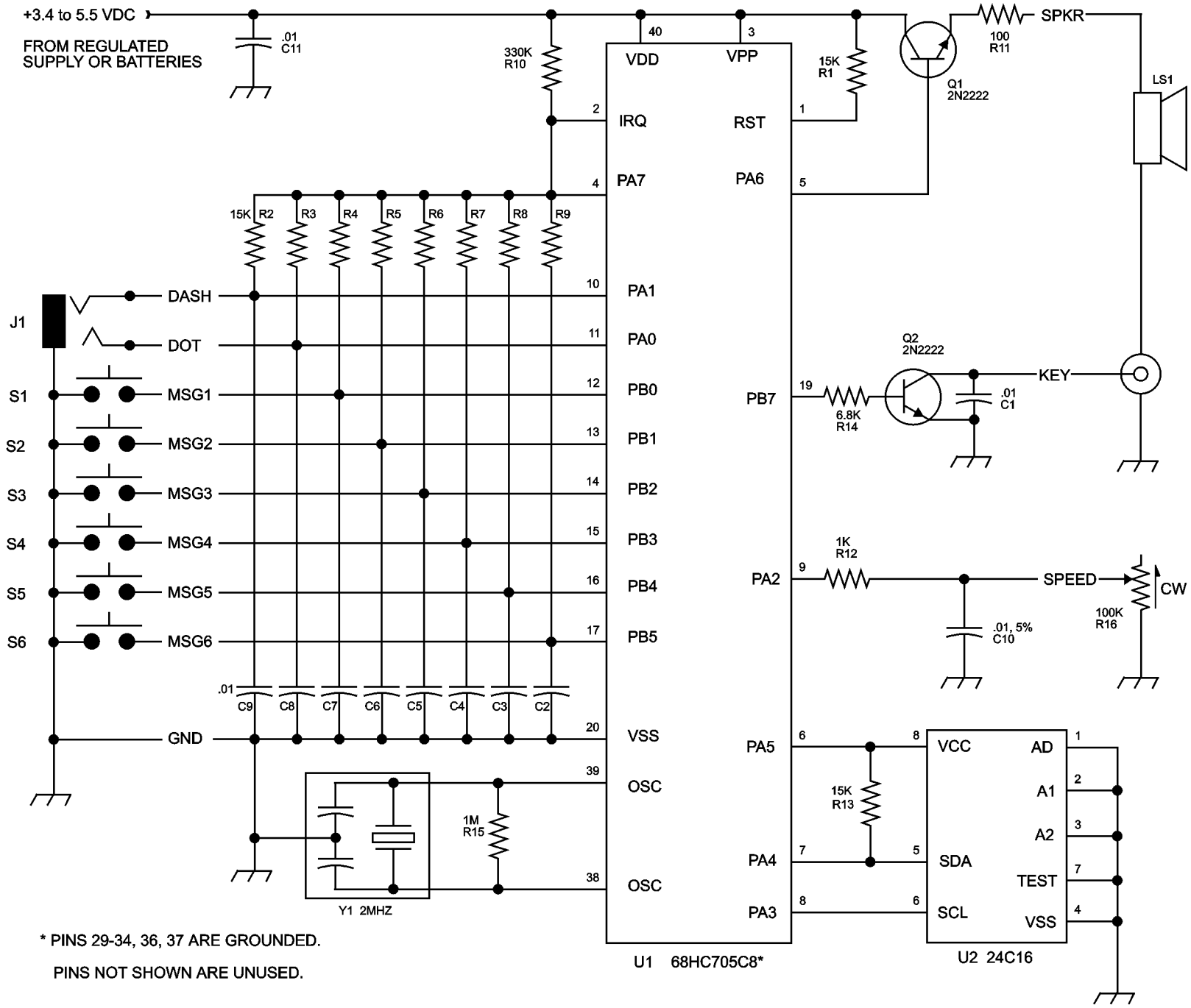

* PINS 29-34, 36, 37 ARE GROUNDED.

PINS NOT SHOWN ARE UNUSED.