Schematic

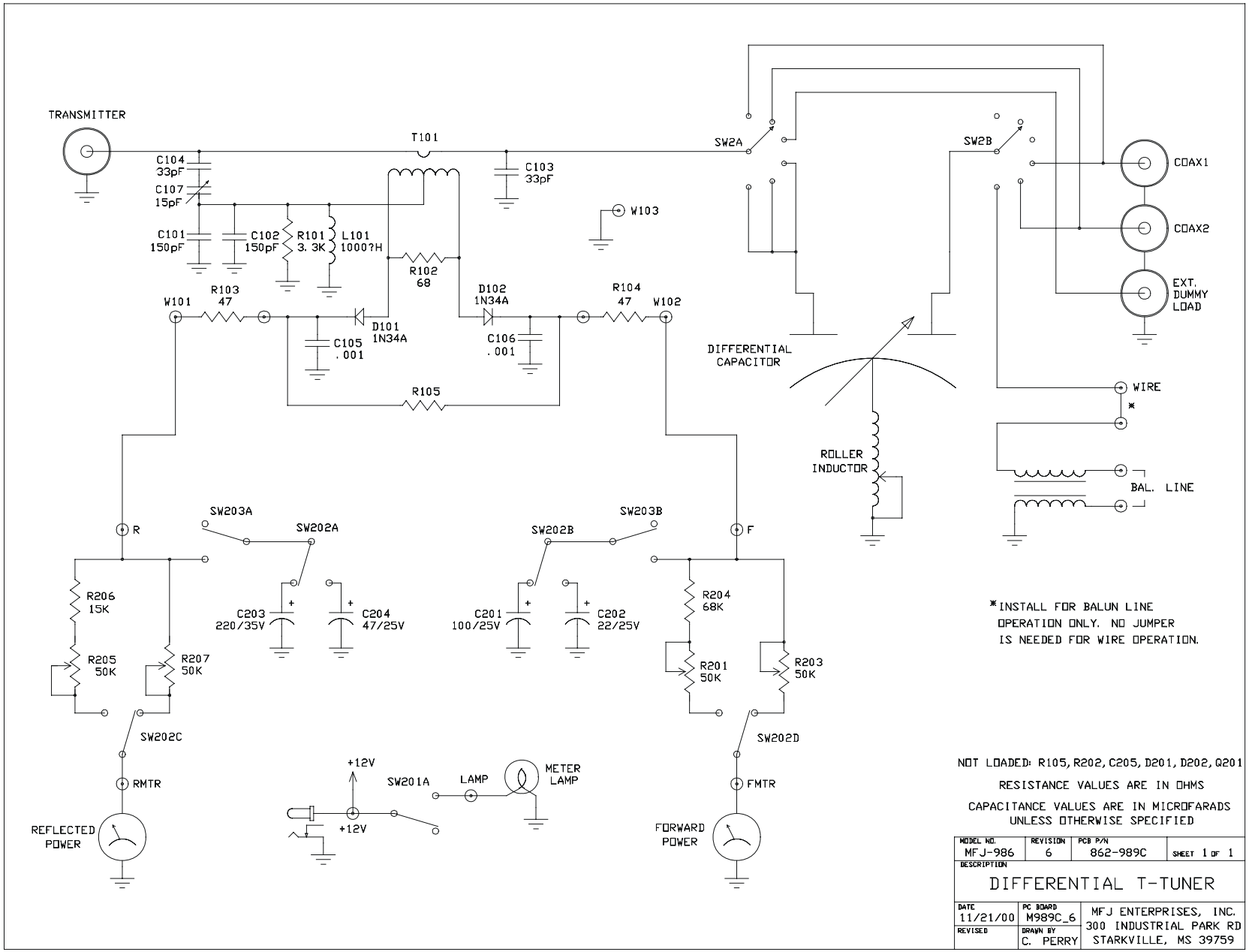
TRANSMITTER
T101
C104 33pF
C107 15pF
C101 150pF
C102 150pF
R101 3. 3K
L101 1000?H
R102 68
C103 33pF
W103
SW2A
SW2B
COAX1
COAX2
EXT. DUMMY LOAD
W101
R103 47
D101 1N34A
C105 .001
D102 1N34A
C106 .001
R104 47
W102
R105
DIFFERENTIAL CAPACITOR
ROLLER INDUCTOR
WIRE
*
BAL. LINE
R
SW203A
SW202A
SW202B
SW203B
F
R206 15K
R205 50K
R207 50K
C203 220/35V
C204 47/25V
C201 100/25V
C202 22/25V
R204 68K
R201 50K
R203 50K
SW202C
SW202D
RMTR
FMTR
REFLECTED POWER
FORWARD POWER
+12V
SW201A
LAMP
METER LAMP
*INSTALL FOR BALUN LINE OPERATION ONLY. NO JUMPER IS NEEDED FOR WIRE OPERATION.
NOT LOADED: R105, R202, C205, D201, D202, Q201
RESISTANCE VALUES ARE IN OHMS
CAPACITANCE VALUES ARE IN MICROFARADS UNLESS OTHERWISE SPECIFIED
MODEL NO. MFJ-986
REVISION 6
PCB P/N 862-989C
SHEET 1 OF 1
DESCRIPTION
DIFFERENTIAL T-TUNER
DATE 11/21/00
PC BOARD M989C_6
REVISED
DRAWN BY C. PERRY
MFJ ENTERPRISES, INC.
300 INDUSTRIAL PARK RD
STARKVILLE, MS 39759