PALOMAR MDL. EC-2018 'ECHO POWER MIKE' SCHEMATIC

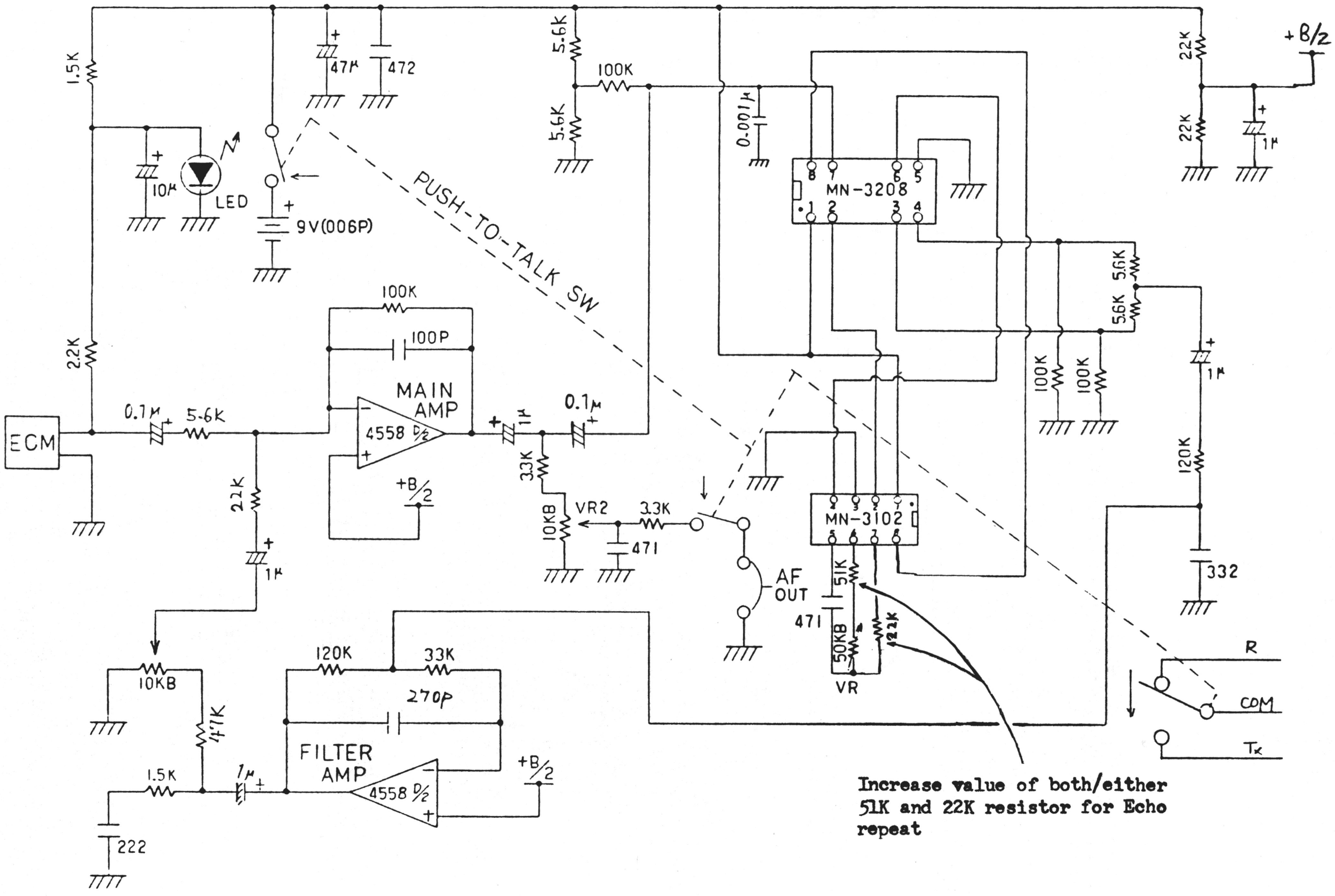

Increase value of both/either 51K and 22K resistor for Echo repeat