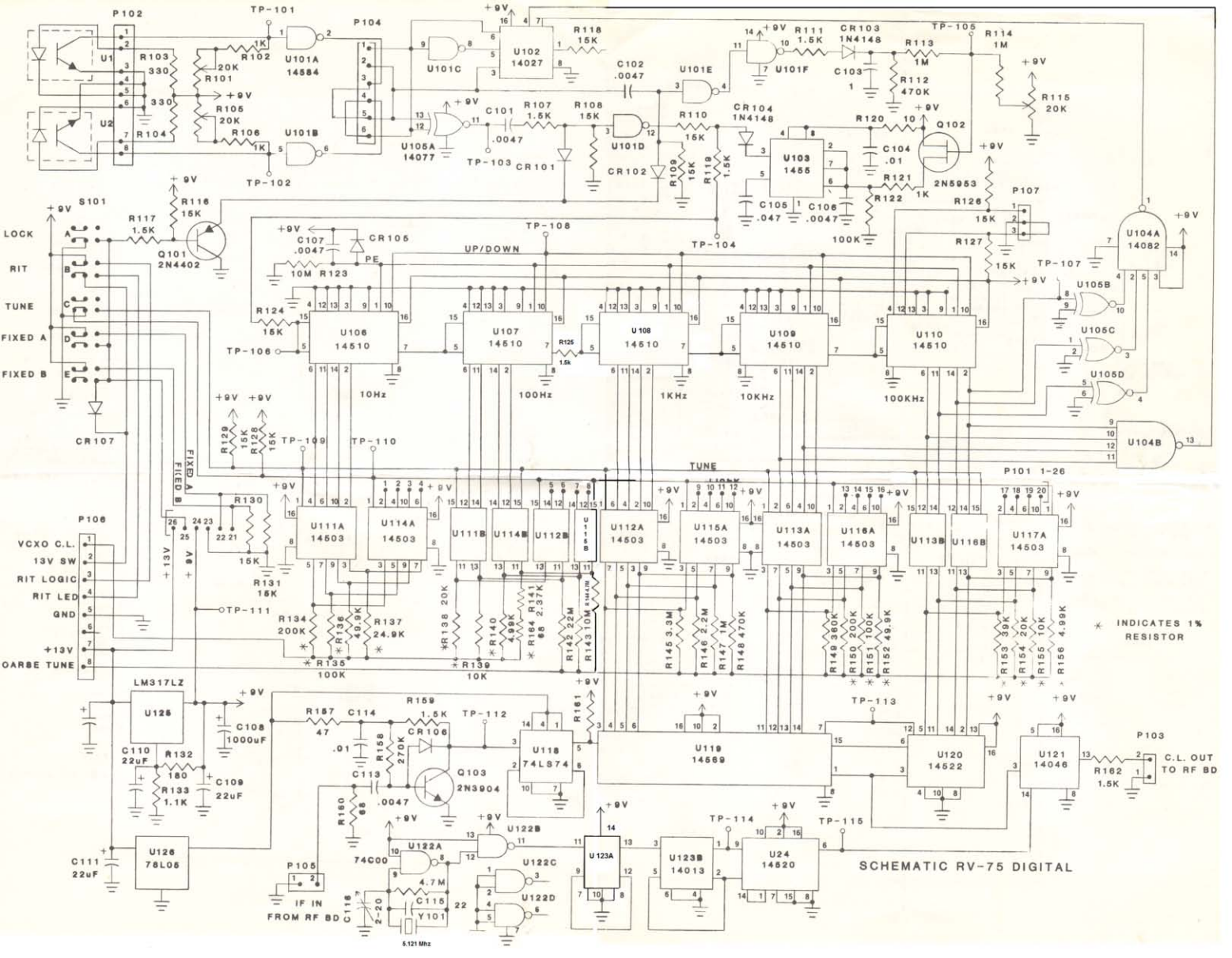

SCHEMATIC RV-75 DIGITAL

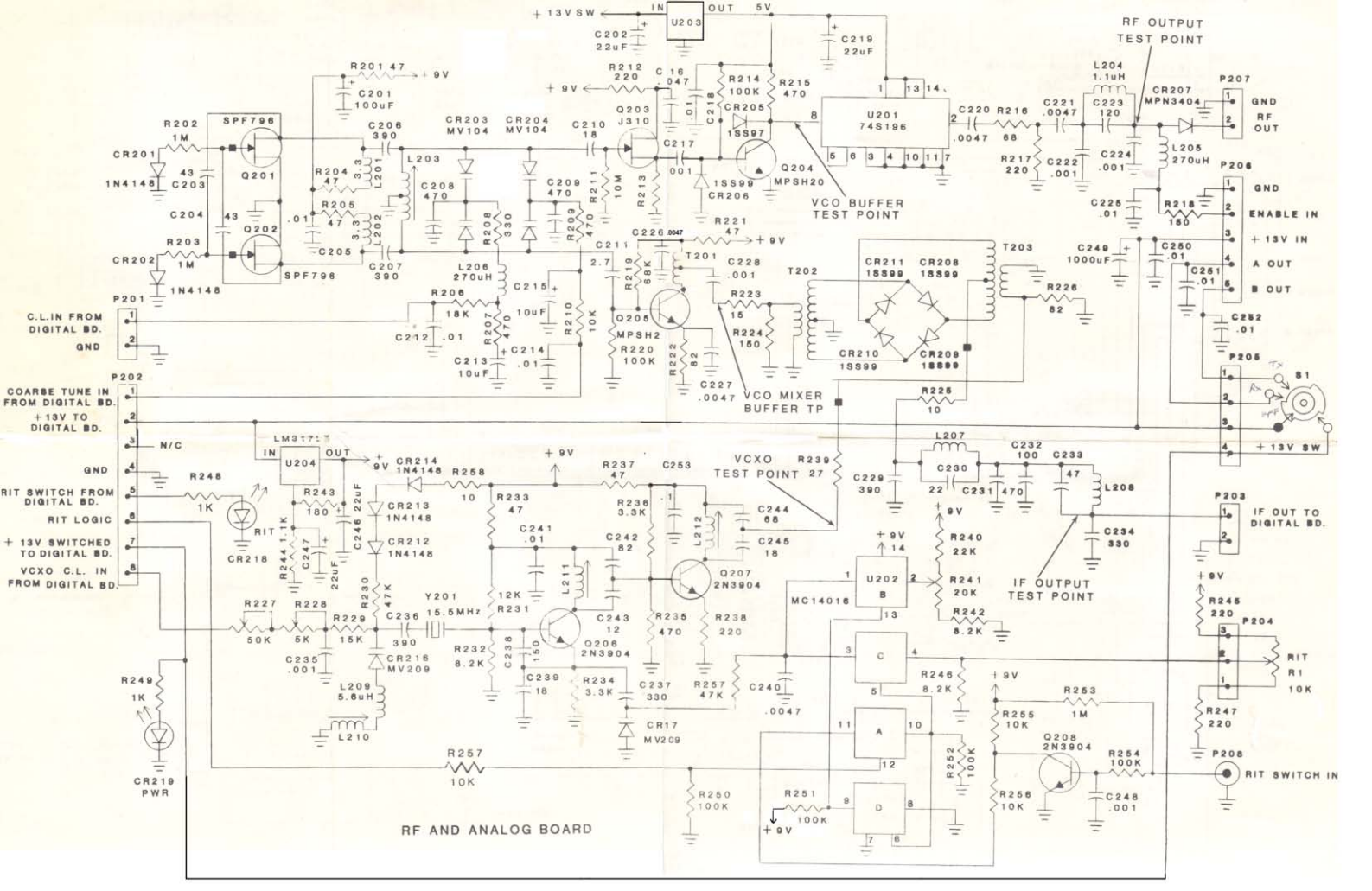
+13V SW
U203
IN
OUT
5V
C202 22uF
C219 22uF
RF OUTPUT TEST POINT
R201 47
+9V
C201 100uF
R212 220
C 16 .047
R214 100K
R215 470
CR205 1SS97
U201 74S196
C220 .0047
R216 68
C221 .0047
L204 1.1uH
C223 120
CR207 MPN3404
P207
GND
RF OUT
R202 1M
SPF796
Q201
CR201 1N4148
C203 43
C204 43
Q202
R203 1M
CR202 1N4148
SPF796
R204 47
R205 47
C205 .01
L201 3.3
L202 3.3
L203
C206 390
C207 390
C208 470
CR203 MV104
CR204 MV104
C209 470
R208 330
R209 470
C210 18
Q203 J310
R211 10M
R213
C217 .001
C218 .01
1SS99 CR206
Q204 MPSH20
VCO BUFFER TEST POINT
R221 47
C226 .0047
C211 2.7
R219 68K
T201
C228 .001
L206 270uH
C215 10uF
R210 10K
Q205 MPSH2
R220 100K
R222 82
C227 .0047
R223 15
R224 150
T202
CR211 1SS99
CR208 1SS99
T203
CR210 1SS99
CR209 1SS99
R226 82
R225 10
VCO MIXER BUFFER TP
C217 .001
C222 .001
C224 .001
L205 270uH
R217 220
C225 .01
R218 150
P206
GND
ENABLE IN
+13V IN
A OUT
B OUT
C249 1000uF
C250 .01
C251 .01
C252 .01
P205
S1
+13V SW
P201
C.L.IN FROM DIGITAL BD.
GND
R206 18K
C212 .01
R207 470
C213 10uF
C214 .01
P202
COARSE TUNE IN FROM DIGITAL BD.
+13V TO DIGITAL BD.
N/C
GND
RIT SWITCH FROM DIGITAL BD.
RIT LOGIC
+13V SWITCHED TO DIGITAL BD.
VCXO C.L. IN FROM DIGITAL BD.
LM317T
U204
OUT
CR214 1N4148
R258 10
R237 47
C253
VCXO TEST POINT
R239 27
C229 390
L207
C230 22
C231 470
C232 100
C233 47
L208
C234 330
IF OUTPUT TEST POINT
P203
IF OUT TO DIGITAL BD.
R248 1K
RIT
CR218
R243 180
C246 22uF
CR213 1N4148
CR212 1N4148
R244 1.1K
C247 22uF
R233 47
C241 .01
C242 82
R236 3.3K
L212
C244 68
C245 18
Q207 2N3904
R240 22K
R241 20K
R242 8.2K
U202 B
MC14016
R245 220
P204
RIT R1 10K
R227 50K
R228 5K
R229 15K
C236 390
Y201 15.5MHz
R230 47K
12K R231
L211
C243 12
R235 470
R238 220
R232 8.2K
C238 150
Q206 2N3904
C235 .001
CR216 MV209
L209 5.6uH
L210
C239 18
R234 3.3K
C237 330
R257 47K
C240 .0047
R246 8.2K
R253 1M
R255 10K
R252 100K
Q208 2N3904
R254 100K
R256 10K
C248 .001
P208
RIT SWITCH IN
R249 1K
CR219 PWR
R257 10K
R250 100K
R251 100K
RF AND ANALOG BOARD