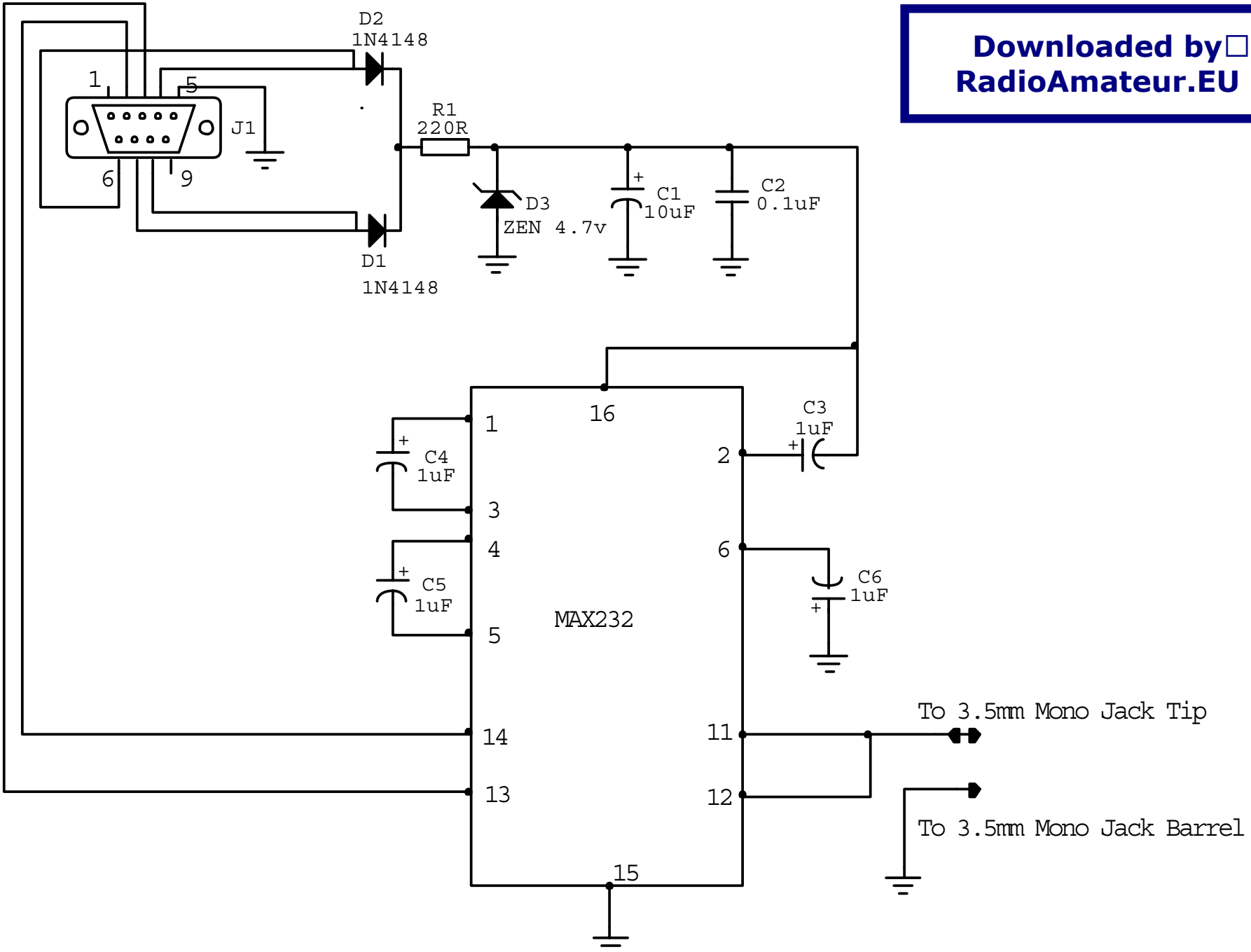Downloaded by
RadioAmateur.EU