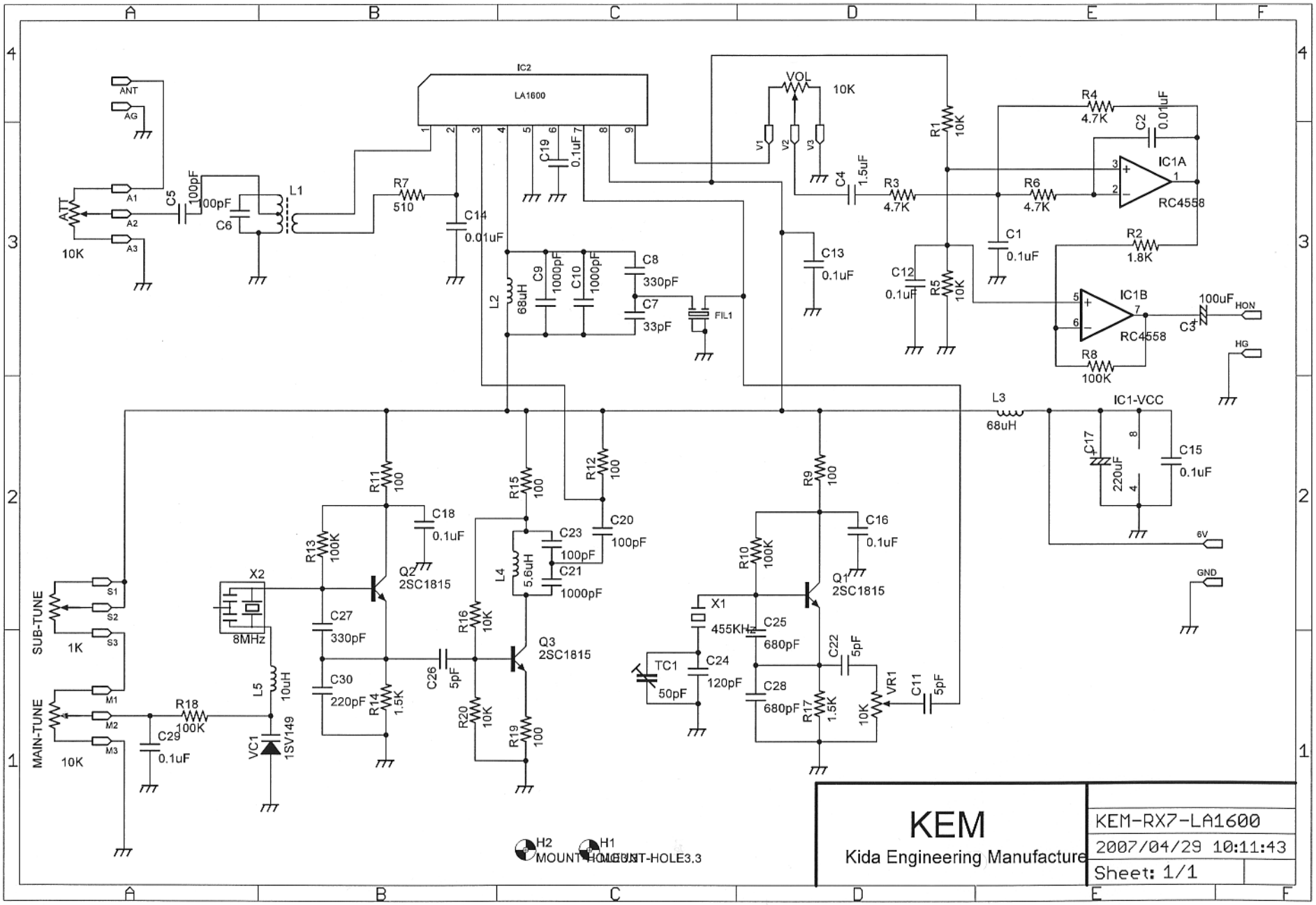
IC2
LA1600
ANT
AG
A1
A2
A3
ATT
10K
C5
100pF
C6
100pF
L1
R7
510
C14
0.01uF
C19
0.1uF
VOL
10K
V1
V2
V3
C4
1.5uF
R3
4.7K
R1
10K
R4
4.7K
C2
0.01uF
IC1A
RC4558
R6
4.7K
C1
0.1uF
R2
1.8K
C13
0.1uF
C12
0.1uF
R5
10K
IC1B
RC4558
100uF
C3
HON
HG
R8
100K
L2
68uH
C9
1000pF
C10
1000pF
C8
330pF
C7
33pF
FIL1
L3
68uH
IC1-VCC
C17
220uF
C15
0.1uF
6V
GND
R11
100
C18
0.1uF
R13
100K
Q2
2SC1815
R15
100
C23
100pF
C20
100pF
R12
100
L4
5.6uH
C21
1000pF
R9
100
C16
0.1uF
R10
100K
Q1
2SC1815
X2
8MHz
C27
330pF
C30
220pF
R14
1.5K
R16
10K
C26
5pF
Q3
2SC1815
R20
10K
R19
100
X1
455KHz
C25
680pF
TC1
50pF
C24
120pF
C28
680pF
C22
5pF
R17
1.5K
10K
VR1
C11
5pF
SUB-TUNE
S1
S2
S3
1K
MAIN-TUNE
M1
M2
M3
10K
R18
100K
C29
0.1uF
L5
10uH
VC1
1SV149
H2
H1
MOUNT-HOLE3.3
KEM
Kida Engineering Manufacture
KEM-RX7-LA1600
2007/04/29 10:11:43
Sheet: 1/1