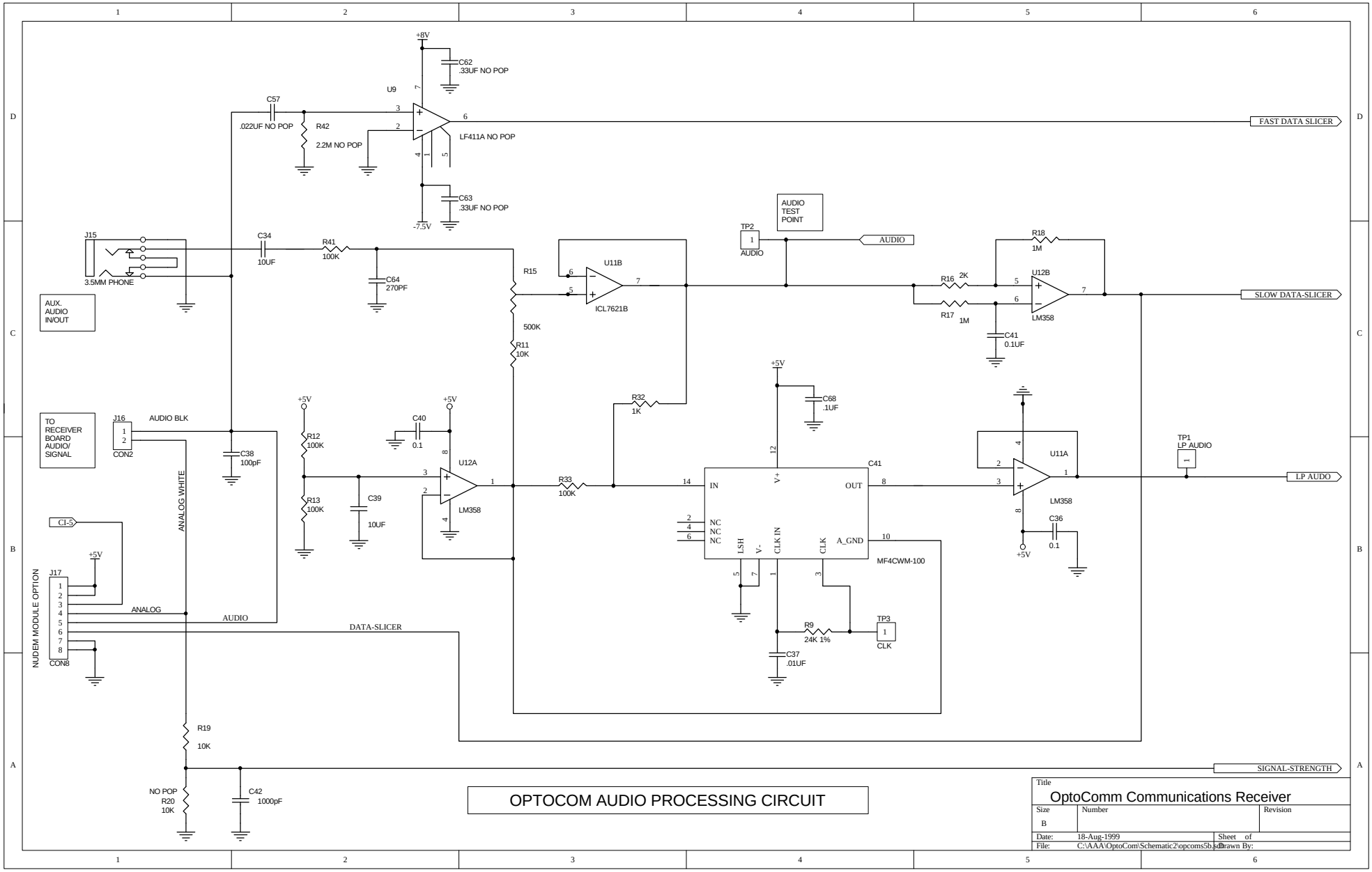

OPTOCOM AUDIO PROCESSING CIRCUIT

Title: OptoComm Communications Receiver		
Size: B	Number	Revision
Date: 18-Aug-1999	Sheet of	
File: C:\AAA\OptoCom\Schematic2\opcoms5b.sch	Drawn By:	