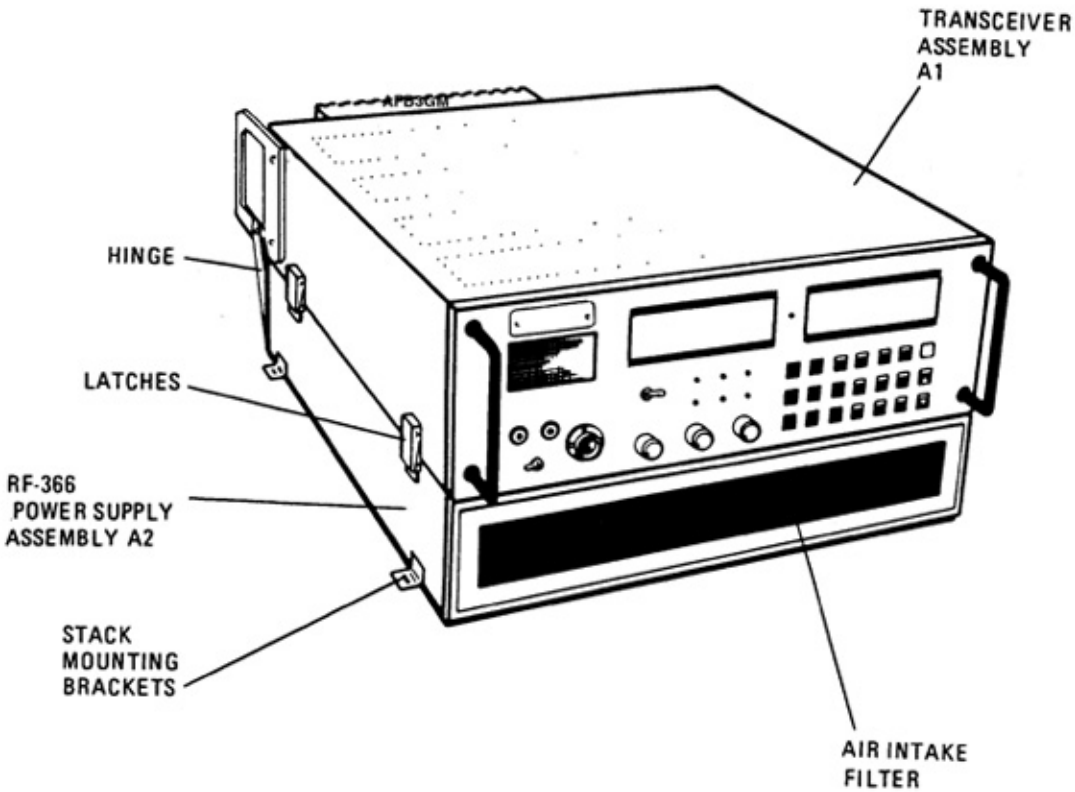

RT-1446/RF-350 Subassemblies

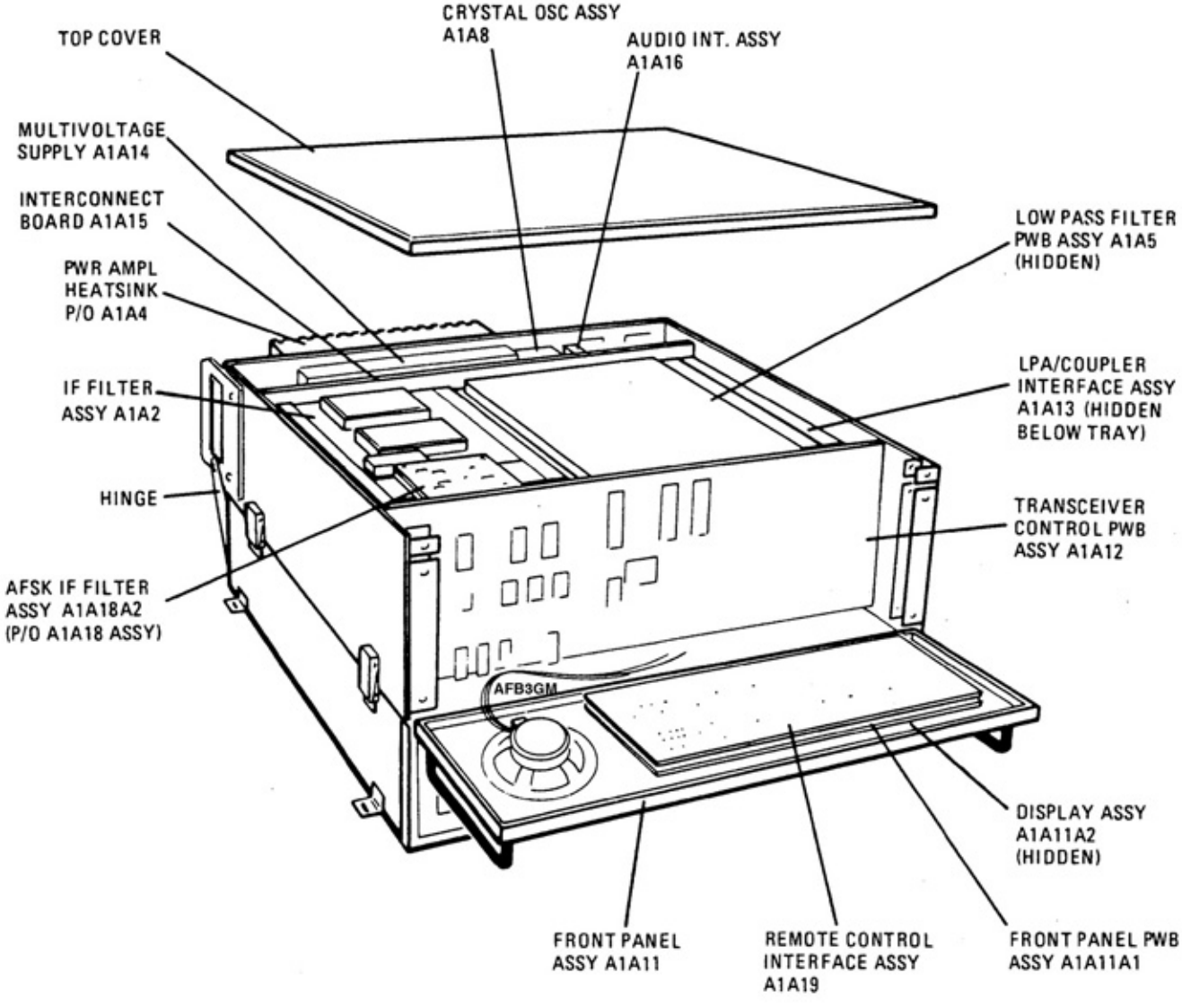
TOP COVER
CRYSTAL OSC ASSY A1A8
AUDIO INT. ASSY A1A16
MULTIVOLTAGE SUPPLY A1A14
INTERCONNECT BOARD A1A15
PWR AMPL HEATSINK P/O A1A4
IF FILTER ASSY A1A2
HINGE
AFSK IF FILTER ASSY A1A18A2 (P/O A1A18 ASSY)
LOW PASS FILTER PWB ASSY A1A5 (HIDDEN)
LPA/COUPLER INTERFACE ASSY A1A13 (HIDDEN BELOW TRAY)
TRANSCEIVER CONTROL PWB ASSY A1A12
AFB3GM
DISPLAY ASSY A1A11A2 (HIDDEN)
FRONT PANEL ASSY A1A11
REMOTE CONTROL INTERFACE ASSY A1A19
FRONT PANEL PWB ASSY A1A11A1

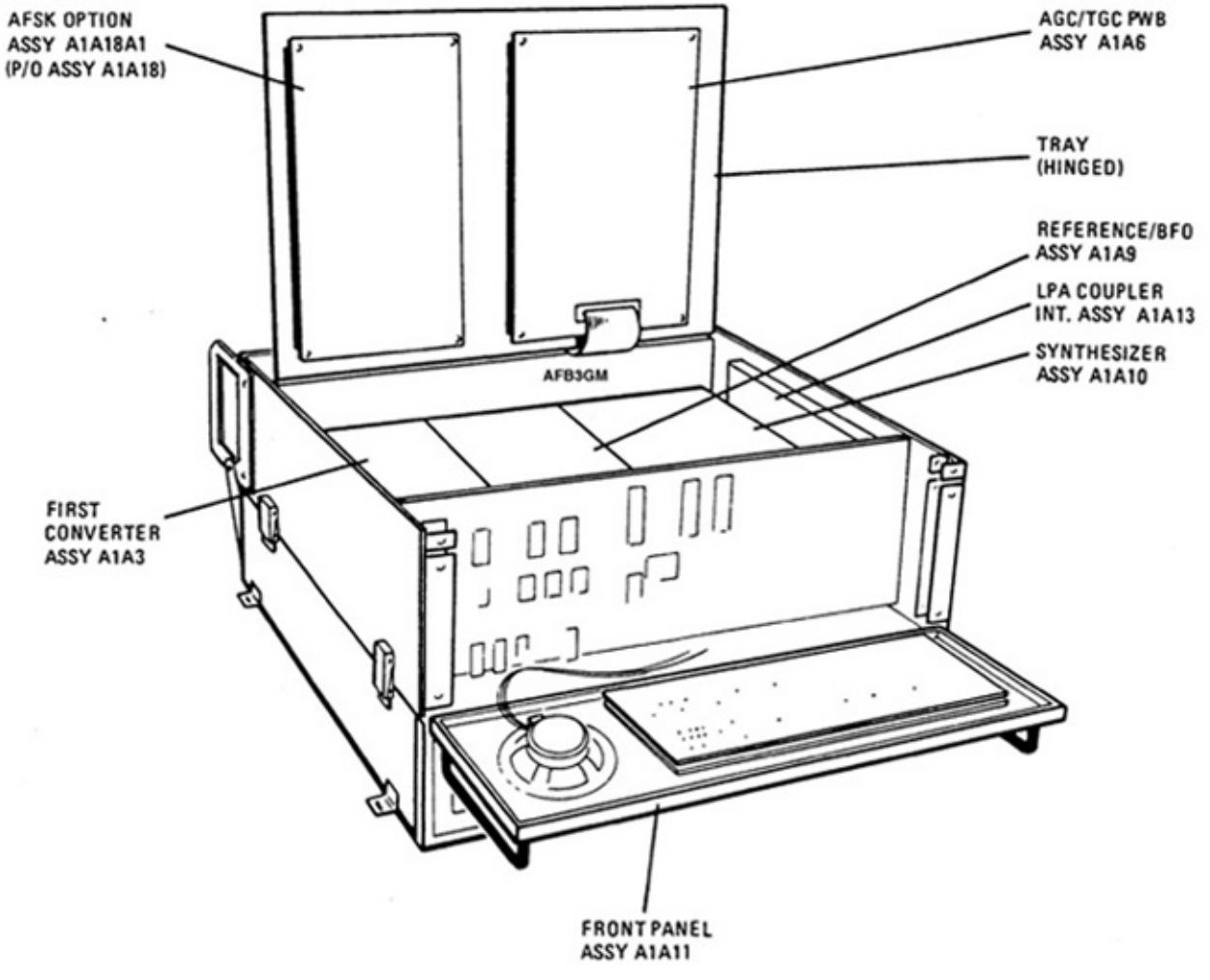
AFSK OPTION
ASSY A1A18A1
(P/O ASSY A1A18)
AGC/TGC PWB
ASSY A1A6
TRAY
(HINGED)
REFERENCE/BFO
ASSY A1A9
LPA COUPLER
INT. ASSY A1A13
SYNTHESIZER
ASSY A1A10
AFB3GM
FIRST
CONVERTER
ASSY A1A3
FRONT PANEL
ASSY A1A11

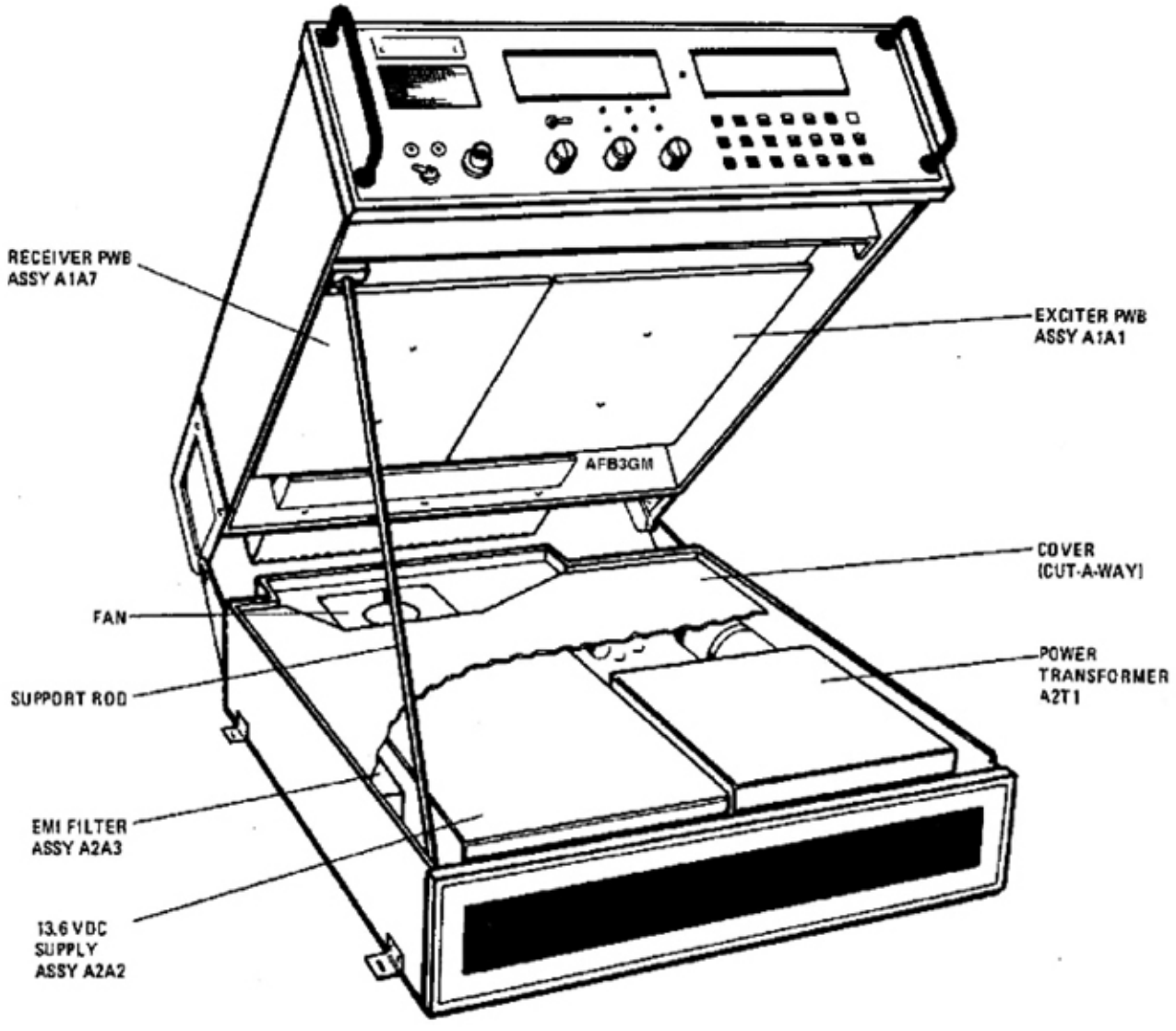

C. TRANSCEIVER ASSEMBLY UNLATCHED AND RAISED