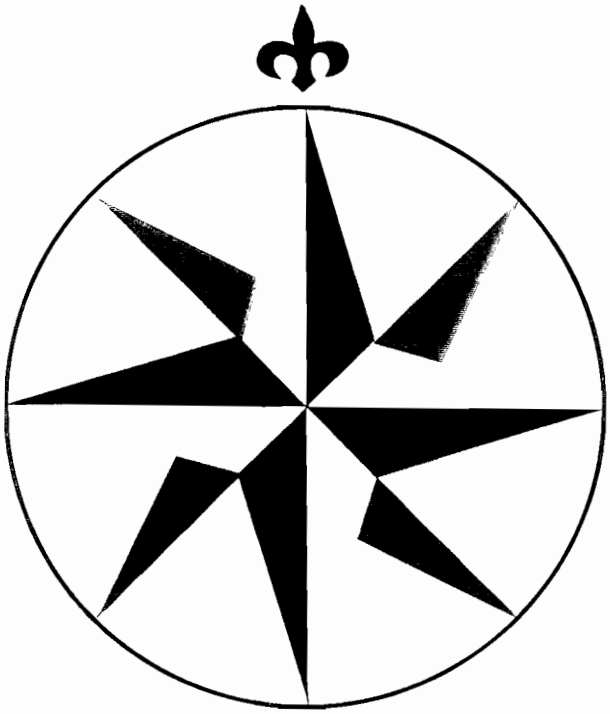

Sailor

Sailor

INSTRUKTIONSBOG FOR SAILOR S1303/S1304

INSTRUCTION BOOK FOR SAILOR S1303/S1304

A/S S. P. RADIO - AALBORG - DENMARK

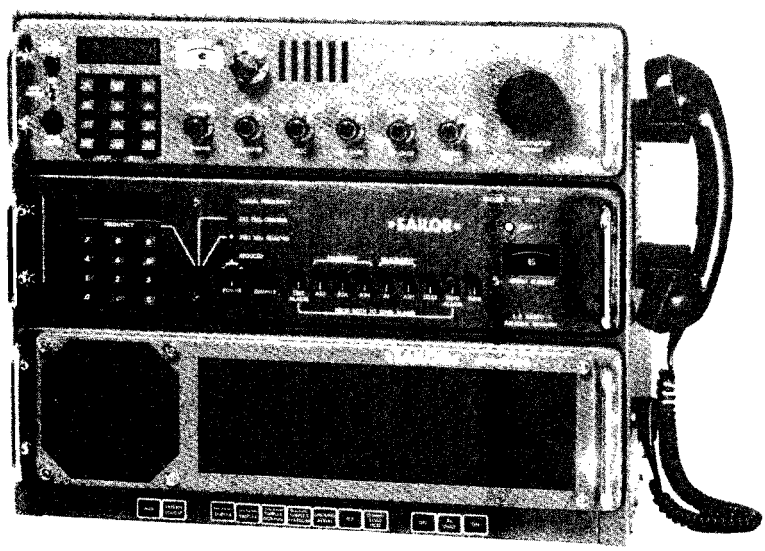

INSTRUCTION BOOK FOR EXCITER S1303/04

Valid from serial No. 316994

CONTENTS

	PAGE
GENERAL DESCRIPTION	1
TECHNICAL DATA	2
CONTROLS	3
PRINCIPLE OF OPERATION	5
PRINCIPAL DESCRIPTION OF TELEGRAPHY MODE	10
PRINCIPAL DESCRIPTION OF TELEX MODE	11
PROGRAMMING OF S1304 FREQUENCIES	13
SERVICE:	
1. MAINTENANCE	15
2. NECESSARY TEST EQUIPMENT	16
3. TROUBLE-SHOOTING	24
4. PERFORMANCE CHECK	28
5. ADJUSTMENT PROCEDURE	35
6. NECESSARY ADJUSTMENTS AFTER REPAIR	41
7. FUNCTION CHECK	43
PIN CONFIGURATIONS	
ADJUSTMENT, MODULE AND TEST POINT LOCATIONS	
PARTS LIST	
CIRCUIT DESCRIPTION AND SCHEMATIC DIAGRAMS	
MAIN SCHEMATIC DIAGRAM	

GENERAL DESCRIPTION

SAILOR S1303/04 is a telephony, telegraphy and telex exciter for use in conjunction with the transmitter T1130 or T1135.

SAILOR S1303/04 can be supplied from power supply N1407/N1411 (24V DC) or N1409/N1410 (AC).

SAILOR S1303 is for radio officer operation with free selection of the transmitting frequency from the keyboard.

SAILOR S1304 is skipper operated with 256 PROM programmed frequencies, free selected from the keyboard.

SAILOR S1303/04 has LCD display for frequency read-out.

SAILOR S1303/04 can operate on any frequency inside the frequency range 1.6 to 8.5 MHz and the maritime frequency bands 12, 16, 22 and 25 MHz.

SAILOR S1303/04 can as option be supplied with two extra frequency bands in the frequency range 8.5 - 10.0 MHz and 11.5 - 28.0 MHz.

SAILOR S1303/04 uses a digital synthesizer for frequency generation. The frequency stability depends on a 10 MHz TCXO.

SAILOR S1303/04 is capable of producing emission of classes A3H (H3E), A3A (R3E), A3J (J3E), A2H (H2A), A1 (A1A), and TELEX (F1B).

SAILOR S1303/04 is provided with a built-in alarm signal generator for distress calls.

SAILOR S1303/04 can as option have a sideband change-over unit, which is able to change the transmitter sideband from the upper to the lower sideband or the opposite.

TECHNICAL DATA

The exciter S1303/04 delivers USB signals on the displayed frequency.

As option a USB/LSB change-over unit can be built into the exciter S1303/04. This unit changes the transmitted sideband from the upper to the lower or opposite.

Frequency ranges:	MF: 1.6 - 4.0 MHz HF: 4.0 - 8.5 MHz The maritime bands 12, 16, 22 and 25 MHz.

As option the frequency range can be extended by two extra frequency bands in the frequency range 8.5 - 10.0 MHz and 11.5 - 28 MHz.

Frequency transmitted:	Any frequency inside the frequency range 1.6 - 8.5 MHz and the maritime bands 12, 16, 22 and 25 MHz. (resolution 100 Hz).

The exciter S1304 operates only on the 256 programmed frequencies.

Frequency stability:

Temperature range 0°C to +40°C:	Less than ±1 ppm (±25 Hz)
Long term stability:	Less than ±1 ppm (±25 Hz) per year
Short term stability:	Less than ±2 Hz

A better frequency stability can be obtained as option.

Mode of operation:	A3H (H3E), A3A (R3E), A3J (J3E), A2H (H2A), A1 (A1A) and TELEX (F1B, F1C).
Distress call:	Automatic A3H (H3E) on 2182 kHz Two-tone-Alarm: 1300 and 2200 Hz with a duration of 45 sec.
Output power:	50 mW PEP/50 ohm
Output power reduction:	Four 5 dB steps
Modulation 8W:	350 - 2700 Hz with compressor.
Operation temperature range:	-15°C to +55°C

CONTROLS

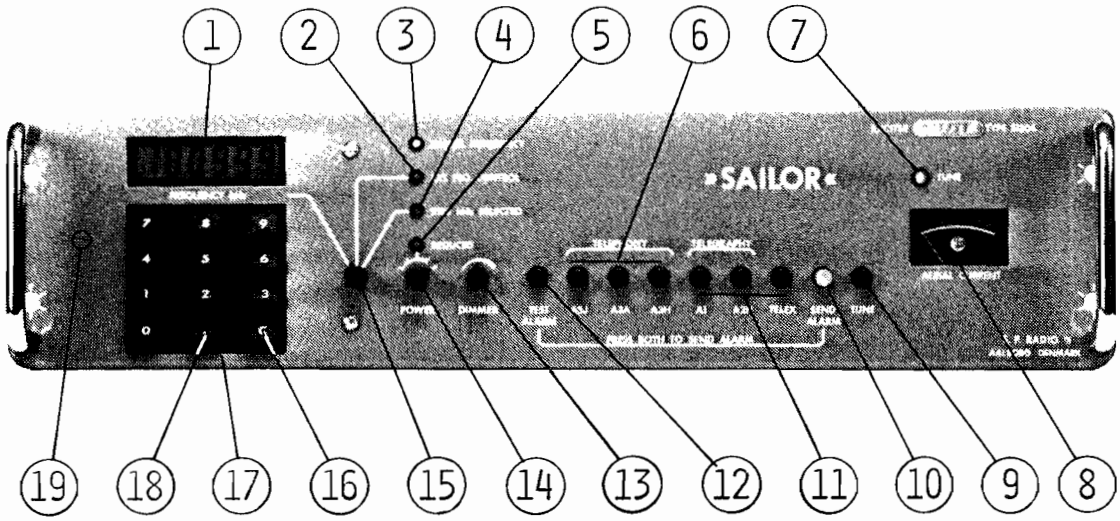

(1) DISPLAY

Displays the keyed-in figures or the transmitted frequency.

(2) EXT. FRQ. CONTROL

With the switch (15) in position EXT. FRQ. CONTROL the lamp lights. The displayed and transmitted frequency can be controlled from an external unit the SAILOR ARQ H1240.

(3) ILLEGAL FREQUENCY

When the displayed frequency is a non operative frequency, the lamp lights.

(4) 2182 kHz SELECTED

With the switch (15) in position 2182 kHz SELECTED the lamp lights. The displayed and transmitted frequency is 2182 kHz.

(5) REDUCED

Is alight when the output power is reduced by the power switch (14) .

(6) A3J (J3E), A3H (H3E) and A3A (R3E).

Selects transmission mode A3H (H3E), A3A (R3E) or A3J (J3E).

(7) TUNE ✳

During tune procedure a fixed light is seen. When the lamp turns off the transmitter is ready for use. Is the lamp flashing at a slow regular rate the transmitter can be ready for use but with a SWR above 2, or the transmitter can be blocked.

(8) AERIAL CURRENT

Shows the current at the aerial insulator of AT1500.

CONTROLS cont.:

(9) TUNE

Starts the automatic tune system of T1130 and AT1500.

(10) SEND ALARM/TEST ALARM

When SEND ALARM and TEST ALARM are activated simultaneously. The transmitter is keyed and transmits the two-tone-alarm signal.

(11) TELEX, A2H (H2A) and A1 (A1A)

Selects the transmission mode TELEX (F1B, F1C) or the TELEGRAPHY modes, A2H (H2A) or A1 (A1A). The modulating frequency in A2H (H2A) mode is 465 Hz.

(12) TEST ALARM

Starts the two-tone-alarm signal generator. The signal can be heard in the microtelephone.

(13) DIMMER

Controls the light intensity of the DISPLAY, the aerial current METER and the lamps EXTERNAL FRQ. CONTROL, 2182 kHz SELECTED, POWER REDUCED.

(14) POWER

Reduces the RF output power in four 5 dB steps.

(15) DISPLAY INPUT SWITCH

With the switch in position KEYBOARD the displayed and transmitted frequency is keyed-in from the keyboard. With the switch in position EXT. FRQ. CONTROL the displayed and transmitted frequency is controlled from an external unit (SAILOR ARQ H1240).
With the switch in position 2182 kHz SELECTED the displayed and transmitted frequency is 2182 kHz.

(16) CLEAR

When pushed the display is cleared and a new frequency can be keyed-in.

(17) KEYBOARD

Enters the frequency into the frequency synthesizer and the display. The frequency shall be entered in kHz, and only if a fractional kHz is wanted it is necessary to activate the decimal point key. Before a new frequency is entered, and if a wrong figure is keyed-in, all the display is cleared by means of the clear key C and the new frequency can be keyed-in.

(18) DECIMAL POINT KEY

If a fractional kHz is wanted it is necessary to activate the decimal point key.

(19) USB/LSB

If fitted, the transmitted sideband, the upper or the lower, can be chosen by the switch.

✳ For further instruction see OPERATING INSTRUCTIONS FOR SAILOR PROGRAMME 1000/B

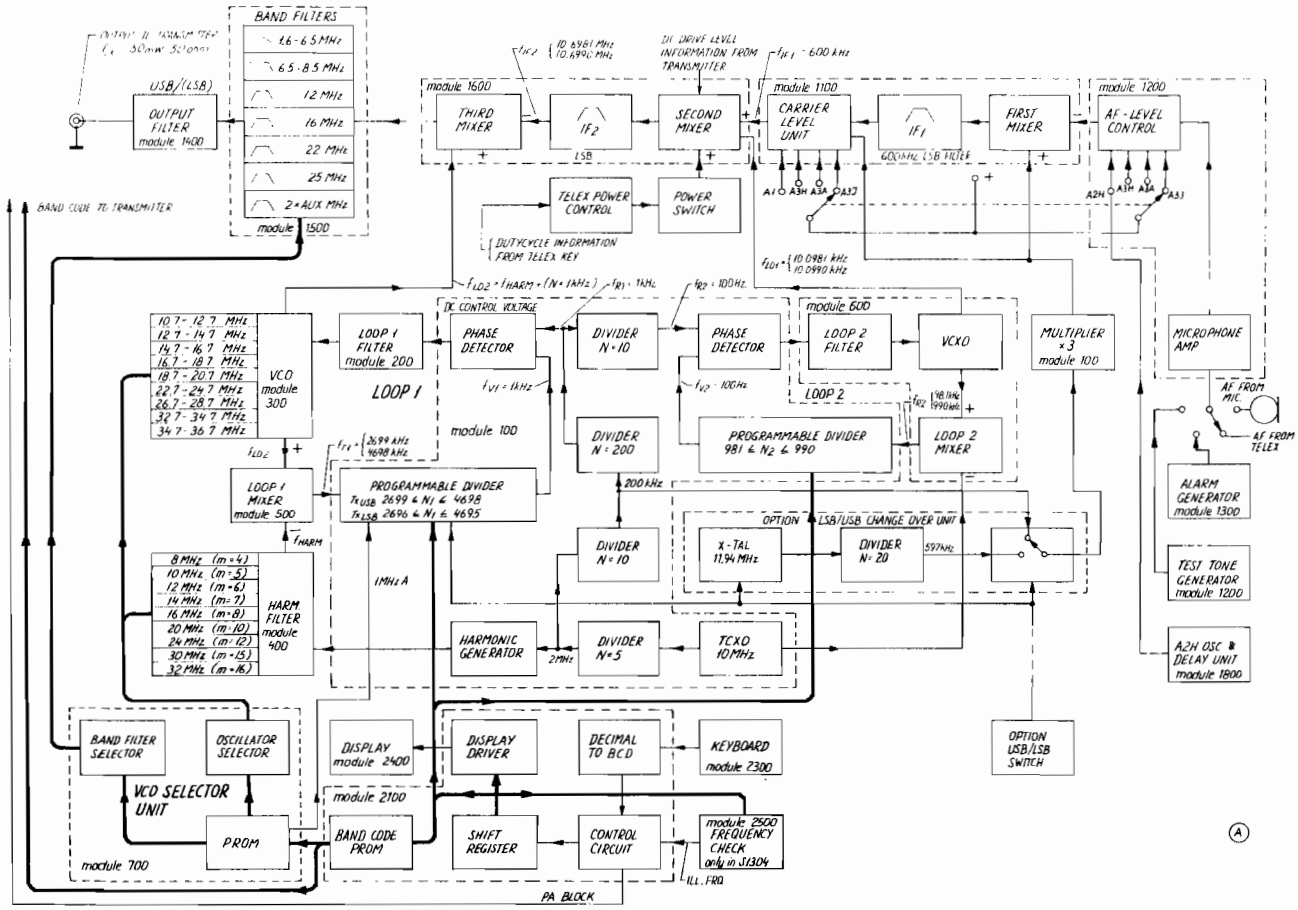

EXCITER S1303 AND S1304

The SAILOR exciter S1303 and S1304 are fully synthesized and deliver USB signals on the carrier frequency.

The signal from the microphone, the alarm generator or the test-tone-generator is fed to the microphone amplifier, where the necessary amplification, amplitude limitation and filtering take place. The amplitude limitation is performed as a compressor stage, which regulates the amplification, so that the amplitude will always be kept below a certain max. level. The AF signal is fed via AF level-control to the first mixer. The AF level-control is determining the right AF level in the modes A3J (J3E), A3A (R3E), A3H (H3E), A2H (H2A) and TELEX (F1B , F1C). The first mixer is a balanced modulator where a 600 kHz double sideband signal is generated. The DSB signal is fed through the 600 kHz LSB crystal filter. The resulting lower sideband signal is fed to the carrier level unit.

In the carrier level unit reinsertion of 600 kHz carrier for A3A (R3E), A3H (H3E), A2H (H2A) and A1 (A1A) takes place. The 600 kHz signal is fed through the 600 kHz LSB delay relay on the A2H (H2A) P.C. board to the second mixer which also receives the local oscillator signal f_{LO1} from Loop 2. The second mixer also receives a DC drive level information from the transmitter, which attenuates the output from the mixer to the wanted drive level. The output from the second mixer is an LSB signal f_{IF2} and it passes through a crystal filter and amplifier to the third mixer.

S1303/4 B4/1
4-0-23861A

Third mixer is a double balanced mixer where both the local oscillator signal f_{LO2} and 2nd IF signal f_{IF2} is suppressed. The output from the mixer is the carrier frequency f_{TX}, with the upper sideband. The band filter section serves the purpose of removing all undesired mixing products. The band filter output amplifier amplifies the signal to the wanted output level 50 mW PEP/50 ohm. From the amplifier the signal is fed through the output filter to the RF output terminal. The output filter removes the remnant of the 10.7 MHz IF signal in the output signal.

IF FITTED

As option the transmitted sideband can be chosen as the USB or the LSB, but the working principle in the signal route is the same as the above described. The difference is in the generation of frequencies.

FREQUENCY GENERATION

The necessary frequencies are generated by two frequency synthesizers according to the phase locked loop principle.

Local oscillator signal f_{LO2} to third mixer is generated in the phase locked loop 1 and has a resolution of 1 kHz.

Local oscillator signal f_{LO1} to second mixer is generated in the phase locked loop 2 and has a resolution of 100 Hz.

LOOP 1

The voltage controlled oscillator (VCO) generates the necessary local oscillator frequencies in nine 2 MHz bands electronically selected by the band code information via the VCO selector unit. Inside each 2 MHz band the VCO frequency f_{LO2} can be varied by means of a DC control voltage from the phase detector. The DC control voltage is filtered in the loop 1 filter.

The phase detector receives two signals, one variable frequency f_{V1} and one reference frequency f_{R1}. The reference frequency f_{R1} is a result of the 10 MHz TCXO frequency being divided down to 1 kHz.

The variable frequency f_{V1} is generated from the VCO frequency f_{LO2} in the following way:

In the loop 1 mixer the counter frequency f_{T1} is produced from the VCO frequency f_{LO2} and the frequency f_{HARM} which is a multiple of 2 MHz. The 2 MHz signal is generated from the 10 MHz TCXO

$$f_{T1} = f_{LO2} - f_{HARM} = f_{LO2} - (m \times 2\ \text{MHz}) = N_1 \times 1\ \text{kHz}$$

For every 2 MHz band a new f_{HARM} is selected by the band code information and it always results in a variation of 2 MHz of the frequency f_{T1} to the programmable divider.

The frequency f_{T1} is divided by the figure N_1 in the programmable divider to the variable frequency f_{V1}

$$f_{V1} = f_{T1}/N_1 = 1\ \text{kHz}$$

The working principle in a phase locked loop is as follows:

If there is a phase error between the variable frequency f_{V1} and the reference frequency f_{R1}, the regulation system has the characteristic that the DC control voltage will correct the VCO frequency and consequently the variable frequency f_{V1}, so that f_{V1} will always follow the reference frequency f_{R1} in phase.

$$f_{R1} = f_{V1} = 1 \text{ kHz}$$

The VCO frequency f_{LO2} is now phase locked on a fixed frequency to the reference frequency f_{R1} and has therefore the same accuracy as this.

Changing of the VCO frequency f_{LO2} by e.g. 1 kHz can be performed by changing the dividing figure N_1 in the programmable divider by one.

$$f_{LO2} = f_{HARM} + (N_1 \times 1 \text{ kHz})$$

Principle of programming is as follows:

The programmable divider contains a counter circuit, which is counting down from a start figure $2000 + P_1$ and stops at the stop figure S_1. Each time the counter reaches the stop figure S_1, a pulse (f_{V1}) is given to the phase detector, and the counter will start counting down again from the start figure $2000 + P_1$. Division of f_{T1} by N_1 has now been achieved.

$$f_{V1} = f_{T1}/N_1;\ N_1 = 2000 + P_1 - S_1$$

A special code from the band code PROM to the VCO selector unit selects the right 2 MHz bands for the VCO and harmonic filter.

Inside each 2 MHz band the programmable figure P_1, is encoded by the MHz information from the VCO selector unit and the kHz frequency information in BCD-code representing the direct frequency reading of the 2 MHz band.

$$\text{Start-figure: } 2000 + P_1;\ 0 \leq P_1 \leq 1999$$

$$\text{Stop-figure: } S1 = -699$$

$$N_1 = 2000 + P_1 - S_1 = P_1 + 2699$$

Output frequency from loop 1:

$$f_{LO2} = m \times 2 \text{ MHz} + (P_1 + 2699) \times 1 \text{ kHz} \qquad 4 \leq m \leq 16$$

LOOP 2

Phase locked loop 2 has a frequency variation of 1 kHz with a resolution of 100 Hz and the working principle is the same as for phase locked loop 1.
Principle of programming is as follows:

The frequency shift in loop 2 is controlled from the 100 Hz information in the displayed frequency.

The programmable divider is counting up from the start figure P_2 to the stop figure S_2.

The 100 Hz frequency information is encoding the start-figure P_2 in BCD-code to the programmable divider.

Start figure: $0 \leq P_2 \leq 9$

Stop figure: $S_2 = 990$

Dividing figure: $N_2 = S_2 - P_2 = 990 - P_2$

Output frequency from loop 2:

$f_{LO1} = 10\ MHz + (N_2 \times 0.1\ kHz) = 10\ MHz + ((990 - P_2) \times 0.1\ kHz);$

$f_{LO1} = 10.099\ MHz - (P_2 \times 0.1\ kHz);$

CARRIER FREQUENCY f_{TX} FROM EXCITER S130X
(upper sideband transmitted)

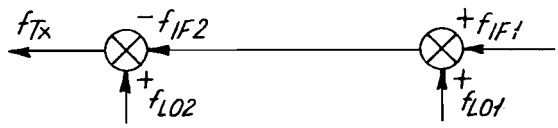

f_{MOD} audio frequency modulation tone.

$f_{IF1} = 0.600\ MHz - f_{MOD}$

$f_{LO1} = 10.099\ MHz - (P_2 \times 0.1\ kHz);$

$f_{IF2} = f_{IF1} + f_{LO2} = 10.699\ MHz - (P_2 \times 0.1\ kHz) - f_{MOD}$

$f_{LO2} = m \times 2\ MHz + (P_1 + 2699) \times 1\ kHz \quad 4 \leq m \leq 16$

$f_{TX} = f_{LO2} - f_{IF2} = (m - 4) \times 2\ MHz + (P_1 + (0.1 \times P_2)) \times 1\ kHz + f_{MOD}$

S130X/04 A4/4

IF FITTED

CARRIER FREQUENCY f_{TX} FROM EXCITER S130X
(lower sideband transmitted)

As option the exciter S130X can be equipped to transmit the lower or the upper sideband on the carrier frequency f_{TX}.

The working principle of the exciter is the same whether it is the upper or the lower sideband which is transmitted. To transmit the lower sideband the generation of frequencies are changed.

F_{IF} is changed from 600 kHz to 597 kHz which is generated from a third phase locked loop. The VCO signal f_{LO2} is changed by 3 kHz by changing the stop figure S_1 of the programmable counter from -699 to -696.

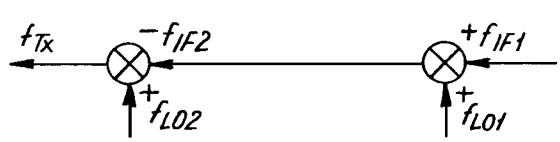

f_{MOD} audio frequency modulation tone

$f_{IF1} = 0.597\ MHz + f_{MOD}$

$f_{LO1} = 10.0990\ MHz - (P_2 \times 0.1\ kHz),\ 0 \leq P_1 \leq 9$

$f_{IF2} = f_{IF1} + f_{LO1} = 10.6960\ MHz - (P_2 \times 0.1\ kHz) + f_{MOD}$

$f_{LO2} = m \times 2\ MHz + (P_1 \times 2696) \times 1\ kHz,\ 4 \leq m \leq 16,\ 0 \leq P_1 \leq 1999$

$f_{TX} = f_{LO2} - f_{IF2} = (m - 4) \times 2\ MHz + (P_1 + (0.1 \times P_2) \times 1\ kHz) - f_{MOD}$

$4 \leq m \leq 16,\ 0 \leq P_1 \leq 1999,\ 0 \leq P_2 \leq 9$

PRINCIPAL DESCRIPTION OF TELEGRAPHY MODE

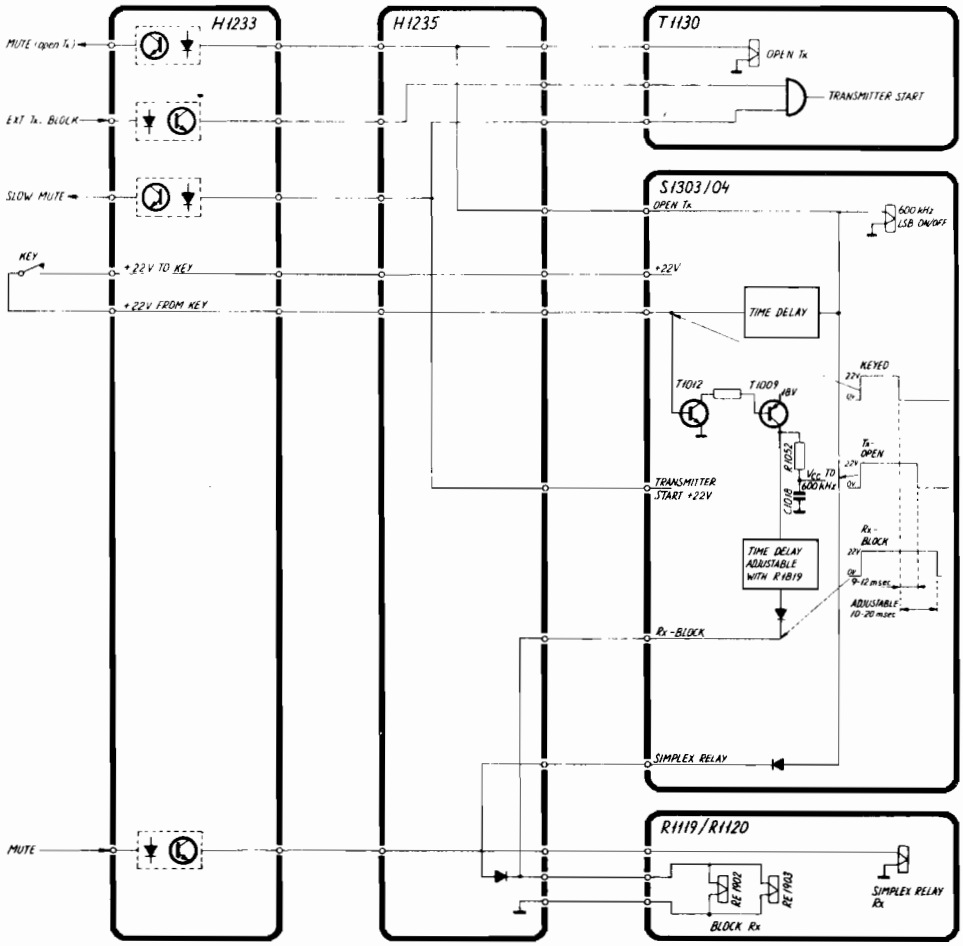

TELEGRAPHY:

See principal diagram above.

PULSE SHAPING:

When the key is pressed and released the transmission starts and stops. The switch off time of the transmitter is delayed 9-12 msecs in order to produce the correct output signal shape (R1052, C1018).

FULL BREAK-IN:

The receiver is blocked for a time period of about 10-20 msecs after the key is released. This secures full break-in on the receiver.

MUTE:

The receiver can be blocked when a DC voltage is applied to MUTE.

EXT. TX BLOCK:

The transmitter can be blocked when a DC voltage is applied to EXT. TX BLOCK.

MUTE (open TX):

MUTE (open TX) can be used to block another transmitter when key down.

SLOW MUTE:

SLOW MUTE: can be used to block another transmitter.

PRINCIPAL DESCRIPTION OF TELEX MODE

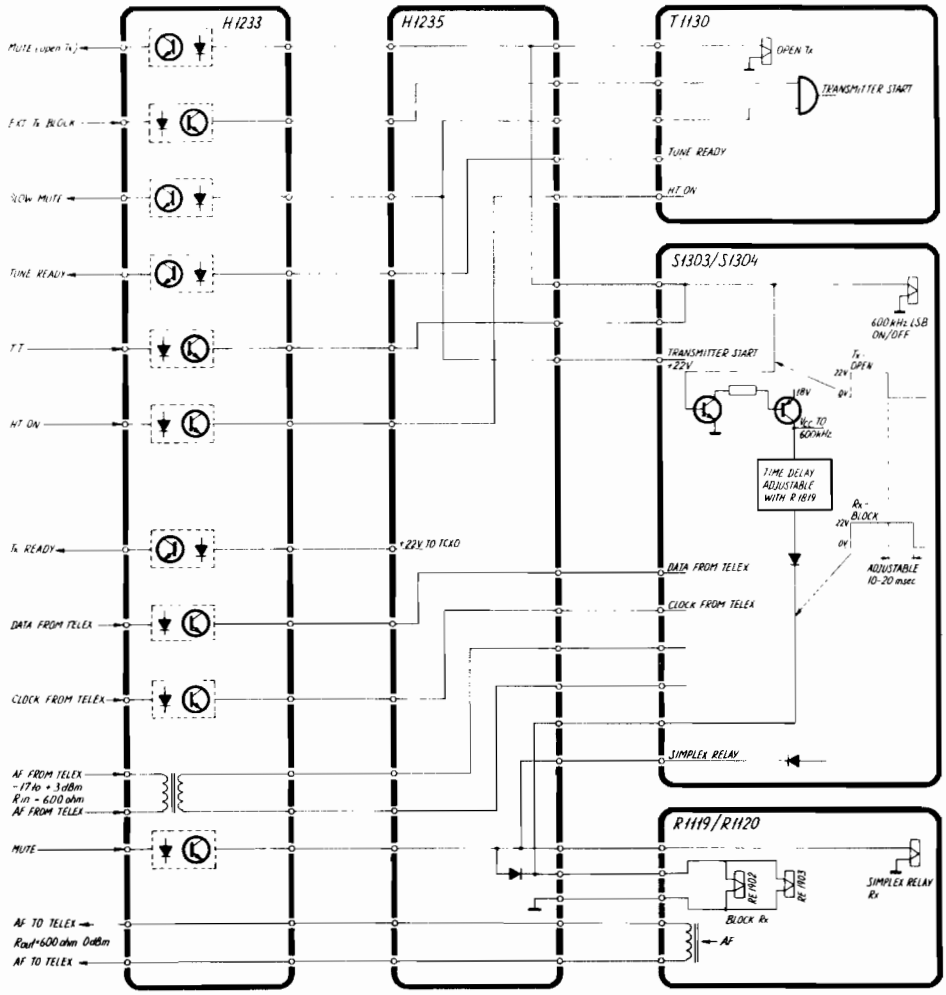

TELEX:

See the principal diagram above.

TX READY:

Indicates that the transmitter is switched on.

HT ON:

Switch on the 22V DC supply to the exciter and the 8V DC supply to the power unit (T1130).

TT

This information is used to switch the short wave set between transmit and receive mode by setting open TX on/off.
When TT from telex is in transmit mode the transmitter is open and the receiver is blocked. When TT from telex changes to the receive mode the transmission stops immediately and the receiver is blocked for another 10-20 msecs controlled from the TIME DELAY (adjustable with R1819). This delay must last until the transmitter output is less than the sensitivity of the receiver. The delay is pre-adjusted from the factory to 12 msecs which secures a good reception with only 20 dB attenuation between the receiver and the transmitter aerials.

TUNE READY:

Indicates that the transmitter is ready to transmit, a steady yellow light is seen on the exciter front plate.

MUTE (open TX):

Is connected to TT and can be used to block another transmitter.

EXT. TX BLOCK:

The transmitter can be blocked when EXT. TX BLOCK is activated.

SLOW MUTE

Is connected to transmitter start and can be used to block another transmitter. When the exciter is in TELEX MODE transmitter start is activated.

MUTE:

The receiver can be blocked when MUTE is activated.

AF TO TELEX:

A constant level AF output from the receiver to the telex equipment.

AF FROM TELEX

The AF input signal from the telex equipment to the exciter is connected here.

DATA FROM TELEX/CLOCK FROM TELEX

This are input terminals to the exciter external frequency control. The transmitting frequency can be controlled by data on this input terminals.

PROGRAMMING OF S1304 FREQUENCIES

To open a new transmitting frequency in the exciter S1304 it is necessary to program the PROM's IC2512, IC2510 and IC2508 placed on the frequency check band. The PROM's are preprogrammed with a set of frequencies, but not all the prom addresses are used. The not used addresses can be programmed when it is wanted to open a new transmitting frequency.

PROM IC2512 is programmed with the 10 MHz and 1 MHz frequency information in BCD code.

PROM IC2510 is programmed with the 100 kHz and 10 kHz frequency information in BCD code.

PROM IC2508 is programmed with the 1 kHz and 100 Hz frequency information in BCD code.

To program a new frequency into the PROM's the PROM PROGRAMMER SAILOR H233 together with the address input unit SAILOR H237 can be used.

PROGRAMMING EXAMPLE S1304:

1. Select the appropriate PROM-manufactor on the PROM PROGRAMMER H233.
2. Activate the RESET button on the PROM PROGRAMMER H233 once.
3. Press the INSERT push button on the PROM PROGRAMMER H233.
4. The PROM to be programmed is placed in the appropriate socket.
   Start the programming procedure with IC2508.
5. Release the INSERT push button.
6. Change the address input from the ADDRESS UNIT H237 until a not used address is found. All the red diodes will be alight.
7. Select the output code to be programmed by means of the eight slide switches. The output code is indicated by the yellow diodes with a lighting diode representing a logic "high" level.

   IC2508: address set up 9A
   wanted frequency 7.5 kHz

	O_1	O_2	O_3	O_4	O_5	O_6	O_7	O_8
BCD:	1	0	1	0	1	1	1	0

8. Activate the BURN push button on H233.
9. The red and yellow diodes shall now show the same code.
10. Change IC2508 by IC2510.
11. Set up the wanted frequency code and push the BURN button.
12. Change IC2510 by IC2512.
13. Set up the wanted frequency code and push the BURN button.
14. Replace the PROM's in the exciter and control, by setting up the programmed frequency on the display, that the yellow diode ILLEGAL FREQUENCY on the front plate is not alight.

If more frequencies are to be programmed, start at point 1. of this procedure for every new frequency.

PROGRAMMING OF S1304 FREQUENCIES cont.:

CONVERTION TABLE (decimal to BCD).

Decimal	BCD			
	0_1	0_2	0_3	0_4
0	0	0	0	0
1	1	0	0	0
2	0	1	0	0
3	1	1	0	0
4	0	0	1	0
5	1	0	1	0
6	0	1	1	0
7	1	1	1	0
8	0	0	0	1
9	1	0	0	1

SERVICE

1. MAINTENANCE
2. NECESSARY TEST EQUIPMENT
3. TROUBLE-SHOOTING
4. PERFORMANCE CHECK
5. ADJUSTMENT PROCEDURE
6. NECESSARY ADJUSTMENTS AFTER REPAIR
7. FUNCTION CHECK

1. MAINTENANCE

1.1.
When the SAILOR SHORT WAVE PROGRAMME 1000/B has been correctly installed, the maintenance can, depending on the environment and working hours, be reduced to a performance check at the service workshop at intervals not exceding 5 years. A complete performance check list is enclosed in the PERFORMANCE CHECK section.

Also inspect the antennas, cables and plugs for mechanical defects, salt deposits, corrosion and any foreign bodies.

Along with each set a TEST SHEET is delivered, in which some of the measurings made at the factory are listed. If the performance check does not show the same values as those on the TEST SHEET, the set must be adjusted as described under ADJUSTMENT PROCEDURE.

Any repair of the set should be followed by a FUNCTION CHECK of the unit in question.

S1302/03/04 A7/1

2. NECESSARY TEST EQUIPMENT

TX: T1127, T1127L, T1130
EXC: S1300, S1301, S1302, S1303, S1304
RX: R1119, R1120
PS: N1400, N1401, N1407, N1409

TX	EXC	RX	PS
X	X	X	X
X	X	X	
	X	X	
X			X
	X	X	

OSCILLOSCOPE:

Bandwidth	DC - 35 MHz
Sensitivity	2 mV/cm
Input impedance	1 Mohm/30 pF
Triggering	EXT-INT-ENVELOPE
E.g. PHILIPS type	PM3216

PASSIVE PROBE:

Attenuation	20 dB (10X)
Input resistance	10 Mohm
Input capacitance	15 pF
Compensation range	10 - 30 pF
E.g. PHILIPS type	PM8925

MULTIMETER:

Sensitivity DC (f.s.d.)	1V
Input impedance	10 Mohm
Accuracy (f.s.d.)	±2%
E.g. PHILIPS type	PM2505

MULTIMETER:

Sensitivity DC (f.s.d.)	0.3V & 3A
Input impedance	30 kohm/V
Accuracy (f.s.d.)	±1%
Current range	100 A
Voltage range	500V & 2.5 kV
E.g. Unigor type	A43
Shunt type	GE4277
H.T. probe type	GE4196

TONE GENERATOR:

Frequency range	200 - 3000 Hz
Output voltage	1V RMS
Output impedance	600 ohm
E.g. PHILIPS type	PM5107

TX	EXC	RX	PS
		X	
	X	X	
		X	
X			X
	X		

AF VOLTMETER:

Sensitivity (f.s.d.)	300 mV
Input impedance	4 ohm
Accuracy (f.s.d.)	±5%
Frequency range	100 - 3000 Hz
E.g. PHILIPS type	PM2505

FREQUENCY COUNTER:

Frequency range	100 Hz - 30 MHz
Resolution	0.1 Hz at f 10 MHz
Accuracy	1×10^{-7}
Sensitivity	100 mV RMS
Input impedance	1 Mohm//25 pF
Single period range	1 sec.
Resolution	1 mSec.
E.g. PHILIPS type	PM6611 + PM9679

SIGNAL GENERATOR:

Frequency range	0.1 - 30 MHz
Output impedance	50/75 ohm
Output voltage	1 uV - 100 mV EMF
Modulation	AM, 30%, 1000 Hz
Ext. mod.	300 - 2700 Hz
Ext. mod. sensitivity	1V for M = 0.3
E.g. PHILIPS	PM5326

POWER SUPPLIES:

N1400/T1127, N1407/T1130

V_{out}	26.5V DC
I_{out} N1400/T1127	70A DC
I_{out} N1407/T1130	35A DC

E.g. 2 pcs. LAMBDA type (N1400/T1127) LXS-G-24-0V-R
1 pc. LAMBDA type (N1407/T1130) LXS-G-24-0V-R

POWER SUPPLIES:

S1300, S1301

V_{out} 1	22V
I_{out} 1	1.5A
V_{out} 2	-45V
I_{out} 2	-0.1A
E.g. SAILOR types	N1402 N1402 spec. N1405

NECESSARY TEST EQUIPMENT cont.:

TX	EXC	RX	PS		
	X	X		R1119, R1120; S1302, S1303, S1304	
				Vout 1	22V
				Iout 1	1A
				Vout 2	8V
				Iout 2	1A
				Vout 3	-45V
				Iout 3	-0.1A
				E.g. SAILOR types	N1402 spec. N1405
	X			TEST BOX S1300/S1301:	
				S.P. type	S1300/01 Test box
	X			ARTIFICIAL KEY S1300TT/S1301:	
				S.P. type	Artificial key
	X			TEST BOX S1302/S1303/S1304:	
				S.P. type	S1302/03/04 Test box
	X			ARTIFICIAL KEY S1303/04:	
				S. P. type	Artificial key S1303/S1304
X				POWER METER:	
				Power range T1127	500W
				Power range T1130	250W
				Impedance	50 ohm
				E.g. Bird Thruline Wattmeter	Model 43
				Plug-in element T1127	500W 2-30 MHz
				Plug-in element T1130	250W 2-30 MHz
X				RF AMMETER (Thermocross):	
				Current range	5A
				E.g. Helweg Mikkelsen & Co. Copenhagen, Denmark type	TR-68x71, 5A
	X			DUMMY LOAD:	
				Impedance	50 ohm
				Frequency range	0-30 MHz
				Power range	
				E.g. Fixed resistor 2 pcs. in parallel PHILIPS type	2322 212 13101

TX	EXC	RX	PS
X	X		
X			

DUMMY LOAD for HF bands, 4 - 25 MHz:

Impedance	50 ohm
Frequency range	4 - 25 MHz
Power range	400W
SWR	1:1.2
E.g. Bird Termaline Coaxial Resistor	Model 8401

DUMMY LOAD for C.T. band 1.6 - 4 MHz:

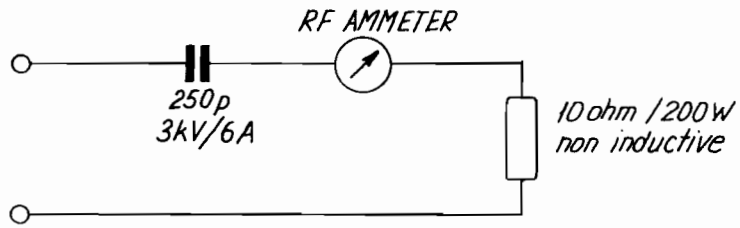

E.g. Draloric type 06-1291TD 20x50L 8KVs 250 pF ±20% R85

E.g. 10 pcs. Dale type PH-25A-17, 100 ohm, 5%, 25W

DIODE PROBE

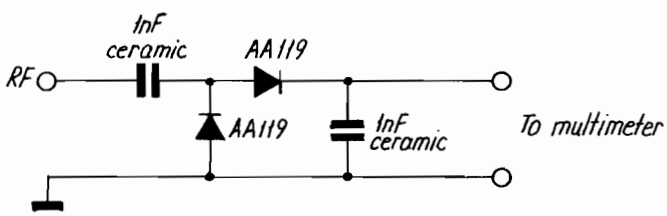

LAYOUT OF THE PROBE

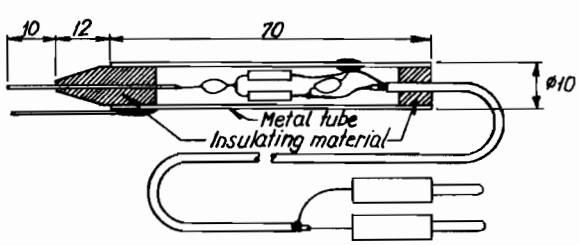

TEST PROM CODES

The test prom codes in IC2114 and IC2115 placed on the frequency control board (2100) is as illustrated below. The illustration is in Hexadecimal code.

Addresses	0	1	2	3	4	5	6	7	8	9	A	B	C	D	E	F	Frequency range
0000	FE	FE	FE	FE	FE	FE	FE	FE	FE	FE	EE	EE	EE	EE	EE	EE	0.1 - 0.9 MHz
0010	BE	BE	BE	BE	BE	BE	BE	BE	BE	BE	EE	EE	EE	EE	EE	EE	1.0 - 1.9 MHz
0020	FA	FA	FA	FA	FA	FA	FA	FA	FA	FA	EE	EE	EE	EE	EE	EE	2.0 - 2.9 MHz
0030	BA	BA	BA	BA	BA	BA	BA	BA	BA	BA	EE	EE	EE	EE	EE	EE	3.0 - 3.9 MHz
0040	DE	DE	DE	DE	DE	DE	DE	DE	DE	DE	EE	EE	EE	EE	EE	EE	4.0 - 4.9 MHz
0050	9E	9E	9E	9E	9E	9E	9E	9E	9E	9E	EE	EE	EE	EE	EE	EE	5.0 - 5.9 MHz
0060	DA	DA	DA	DA	DA	DA	9A	9A	9A	9A	EE	EE	EE	EE	EE	EE	6.0 - 6.9 MHz
0070	F6	F6	F6	F6	F6	F6	F6	F6	F6	F6	EE	EE	EE	EE	EE	EE	7.0 - 7.9 MHz
0080	B6	B6	B6	B6	B6	F2	F2	F2	F2	F2	EE	EE	EE	EE	EE	EE	8.0 - 8.9 MHz
0090	B2	B2	B2	B2	B2	B2	B2	B2	B2	B2	EE	EE	EE	EE	EE	EE	9.0 - 9.9 MHz
00A0	D6	D6	D6	D6	D6	D6	D6	D6	D6	D6	EE	EE	EE	EE	EE	EE	10.0 - 10.9 MHz
00B0	96	96	96	96	96	96	96	96	96	96	EE	EE	EE	EE	EE	EE	11.0 - 11.9 MHz
00C0	D2	D2	D2	D2	D2	D2	D2	D2	D2	D2	EE	EE	EE	EE	EE	EE	12.0 - 12.9 MHz
00D0	92	92	92	92	92	92	92	92	92	92	EE	EE	EE	EE	EE	EE	13.0 - 13.9 MHz
00E0	EE	EE	EE	EE	EE	EE	EE	EE	EE	EE	EE	EE	EE	EE	EE	EE	14.0 - 14.9 MHz
00F0	AE	AE	AE	AE	AE	AE	AE	AE	AE	AE	EE	EE	EE	EE	EE	EE	15.0 - 15.9 MHz
	IC2115 Module 2100 $ DD6C																

Addresses	0	1	2	3	4	5	6	7	8	9	A	B	C	D	E	F	Frequency range
0000	EA	EA	EA	EA	EA	EA	EA	EA	EA	EA	EE	EE	EE	EE	EE	EE	16.0 - 16.9 MHz
0010	AA	AA	AA	AA	AA	AA	AA	AA	AA	AA	EE	EE	EE	EE	EE	EE	17.0 - 17.9 MHz
0020	CE	CE	CE	CE	CE	CE	CE	CE	CE	CE	EE	EE	EE	EE	EE	EE	18.0 - 18.9 MHz
0030	8E	8E	8E	8E	8E	8E	8E	8E	8E	8E	EE	EE	EE	EE	EE	EE	19.0 - 19.9 MHz
0040	CA	CA	CA	CA	CA	CA	CA	CA	CA	CA	EE	EE	EE	EE	EE	EE	20.0 - 20.9 MHz
0050	8A	8A	8A	8A	8A	8A	8A	8A	8A	8A	EE	EE	EE	EE	EE	EE	21.0 - 21.9 MHz
0060	E6	E6	E6	E6	E6	E6	E6	E6	E6	E6	EE	EE	EE	EE	EE	EE	22.0 - 22.9 MHz
0070	A6	A6	A6	A6	A6	A6	A6	A6	A6	A6	EE	EE	EE	EE	EE	EE	23.0 - 23.9 MHz
0080	E2	E2	E2	E2	E2	E2	E2	E2	E2	E2	EE	EE	EE	EE	EE	EE	24.0 - 24.9 MHz
0090	A2	A2	A2	A2	A2	A2	A2	A2	A2	A2	EE	EE	EE	EE	EE	EE	25.0 - 25.9 MHz
00A0	C6	C6	C6	C6	C6	C6	C6	C6	C6	C6	EE	EE	EE	EE	EE	EE	26.0 - 26.9 MHz
00B0	86	86	86	86	86	86	86	86	86	86	EE	EE	EE	EE	EE	EE	27.0 - 27.9 MHz
00C0	C2	C2	C2	C2	C2	C2	C2	C2	C2	C2	EE	EE	EE	EE	EE	EE	28.0 - 28.9 MHz
00D0	82	82	82	82	82	82	82	82	82	82	EE	EE	EE	EE	EE	EE	29.0 - 29.9 MHz
00E0	FF	FF	FF	FF	FF	FF	FF	FF	FF	FF	EE	EE	EE	EE	EE	EE	
00F0	FF	FF	FF	FF	FF	FF	FF	FF	FF	FF	EE	EE	EE	EE	EE	EE	
	IC2114 Module 2100 $ D674																

Programming table for test prom IC702

Carrier Frequency kHz	Address		DATA
	ZYXVT	HEX	HEX
0 to 999.9	00000	00	00
1000 to 1999.9	00001	01	80
2000 to 2999.9	00010	02	01
3000 to 3999.9	00011	03	81
4000 to 4999.9	00100	04	02
5000 to 5999.9	00101	05	82
6000 to 6399.9	00110	06	0D
6400 to 6999.9	00111	07	1D
7000 to 7999.9	01000	08	9D
8000 to 8499.9	01001	09	13
8500 to 8999.9	01010	0A	13
9000 to 9999.9	01011	0B	93
10000 to 10999.9	01100	0C	67
11000 to 11999.9	01101	0D	E7
12000 to 12999.9	01110	0E	24
13000 to 13999.9	01111	0F	A4
14000 to 14999.9	10000	10	76
15000 to 15999.9	10001	11	F6
16000 to 16999.9	10010	12	3C
17000 to 17999.9	10011	13	BC
18000 to 18999.9	10100	14	78
19000 to 19999.9	10101	15	F8
20000 to 20999.9	10110	16	79
21000 to 21999.9	10111	17	F9
22000 to 22999.9	11000	18	45
23000 to 23999.9	11001	19	F5
24000 to 24999.9	11010	1A	7E
25000 to 25999.9	11011	1B	DE
26000 to 26999.9	11100	1C	7F
27000 to 27999.9	11101	1D	EF
28000 to 28999.9	11110	1E	7A
29000 to 29999.9	11111	1F	FA

IC702 Module 700 OFDA

NECESSARY TEST EQUIPMENT cont.:

SCEMATIC DIAGRAM FOR TESTBOX S1302/03/04

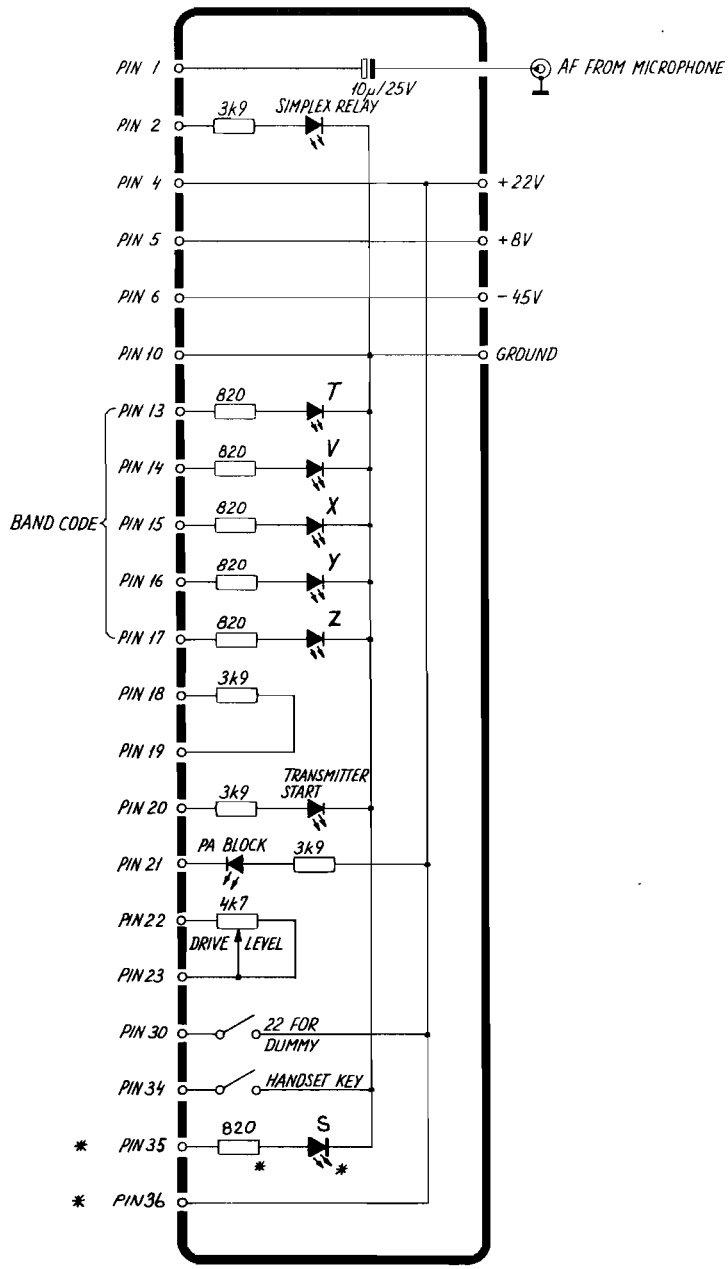

* Not fitted in testbox for S1303/04

TVXYZ: The diodes are alight according to the chosen bandcode.

TRANSMITTER START: The diode is alight when handset key is activated, when TUNE, and in SEND ALARM.
In S1303/04 the diode is alight in TELEX and in TELEGRAPHY.

PA BLOCK: The diode is alight when dummy and 2182 kHz is chosen at the same time and the diode will flash once when dummy load is chosen.

SIMPLEX RELAY: The diode is alight when TUNE is activated in 2182 kHz + handset key is on, and in SEND ALARM.

ARTIFICIAL KEY FOR S1303 and S1304.

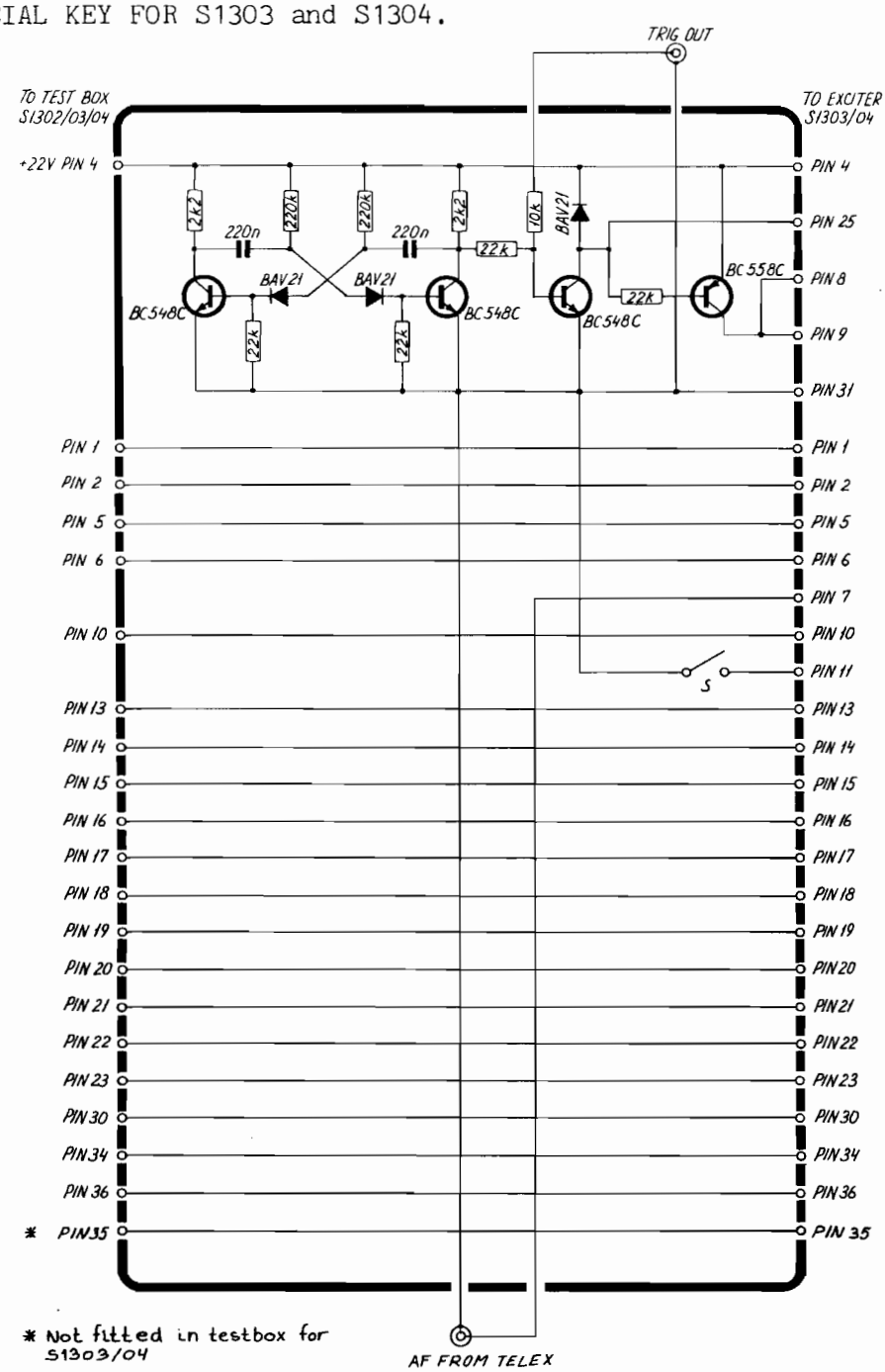

The ARTIFICIAL KEY is designed to connect between the EXCITER S1303/04 and the TESTBOX S1302/03/04. The necessary wires are fed through to the TESTBOX S1302/03/04 and a multivibrator keys via two transistors the exciter in the telex and telegraphy mode. The key frequency is approx. 15 Hz. An output TRIG OUT taken from the multivibrator can be used to trig an oscilloscope. An input terminal can be used to feed an AF signal into the exciter to modulate it is TELEX mode.

The switch on the front plate of the ARTIFICIAL KEY is together with the square wave on pin 25 used to test the external frequency read in.

3. TROUBLE-SHOOTING

Trouble-shooting should only be performed by persons with sufficient technical knowledge, who have the necessary test equipment at their disposal, and who have carefully studied the operation principles and structure of the unit in question.

Start to find out whether the fault is somewhere in the antenna circuit, the power source, or in the short wave set.

When the fault has been located to a certain unit look up the PERFORMANCE CHECK list in the instruction book and make relevant performance check to incircle the fault. Then look up the CIRCUIT DESCRIPTION. This section contains schematic diagrams, description of the modules and pictures showing the location of the components. (ADJUSTMENT LOCATIONS).
Typical AC and DC voltages are indicated on the schematic diagrams.

No adjustment must take place unless the service workshop has the necessary test equipment to perform the ADJUSTMENT PROCEDURE in question.

After repair or replacement of a module look up the section NECESSARY ADJUSTMENTS AFTER REPAIR to see, whether the unit has to be adjusted or not.

The unit has to have a complete FUNCTION CHECK after repair.

TROUBLE-SHOOTING IN THE FREQUENCY GENERATING CIRCUIT

LOOP 1

If the fault has been located to Loop 1 the following hints can be used for trouble-shooting.

If there is no output signal from the VCO the fault has to be found in the VCO unit.

If the output frequency from the VCO is lower than the low frequency limits or higher than the high frequency limits of the 2 MHz band in question, the phase-locked Loop 1 is out of lock. For VCO frequencies look-up the section PRINCIPLE OF OPERATION.

1. Check the Loop 1 mixer output signal on the terminal "Loop 1 out".
   a. If there is no output signal, the failure is on Loop 1 mixer, harmonic filter unit or VCO unit.
   b. If the output frequency is approx. 2 MHz or approx. 5 MHz, the VCO unit Loop 1 mixer and the harmonic filter unit are apparently ok.
2. Check that the frequency on the phase/frequency detector IC106, pin 1 is 1 kHz.

3. Check the Loop 1 programmable divider.
   a. If the frequency on the input terminal "Loop 1 in" is approx. 2 MHz and the frequency on the phase/frequency detector IC106, pin 3 is lower than 1 kHz, the programmable divider is apparently ok.
   b. If the frequency on the input terminal "Loop 1 in" is approx. 5 MHz and the frequency on the phase/frequency detector IC106, pin 3 is higher than 1 kHz, the programmable divider is apparently ok.

4. Check the phase/frequency detector IC106.
   a. Measure 1.5V DC on the terminal "PD1 (1.5V) out" on divider unit.
   b. If the input frequency on IC106, pin 3 is higher than 1 kHz and the DC voltage on the terminal "PD1 out" on divider unit is approx. 0.7V, the phase/frequency detector is apparently ok.
   c. If the input frequency on IC106, pin 3 is lower than 1 kHz and the DC voltage on the terminal "PD1 out" on divider unit is approx. 2.3V, the phase/frequency detector is apparently ok.

5. Check the integrator IC202 on Loop 1 filter & $\pm$18V supply unit.
   a. If the DC voltage on the terminal "PD1 in" is approx. 0.7V and the DC voltage on output terminal of IC202, pin 6 is approx. -4V, the integrator IC202 is apparently ok.
   b. If the DC voltage on the terminal "PD1" is approx. 2.3V and the DC voltage on the output terminal of IC202, pin 6 is approx. -17V, the integrator IC202 is apparently ok.

6. If the failure has not been found yet the 1 kHz loop filter IC201 and the wirings to the VCO must be checked.

LOOP 2

If the fault has been located to Loop 2 the following hints can be used for trouble-shooting.

If there is no output signal from the VCXO and Loop 2 filter on the terminal "VCXO out", the failure has to be found in the VCXO.

If the output frequency from the VCXO and Loop 2 filter on the terminal "VCXO out" is lower than 10.098 MHz or higher than 10.099 MHz, the phase-locked Loop 2 is out of lock.

1. Check the output signal on VCXO and Loop 2 filter terminal "Loop 2 out".
   a. If there is no output signal, the failure is in the Loop 2 mixer or the 10 MHz injection signal is missing.
   b. If the output frequency is slightly lower than 98 kHz or slightly higher than 99 kHz, the VCXO, Loop 2 mixer and the 10 MHz injection signal are apparently ok.

2. Check that the frequency on the phase/frequency detector IC113, pin 1 is 100 Hz.

3. Check the Loop 2 programmable divider.

   a. If the frequency on the input terminal "Loop 2 in" is approx. 97 kHz and the frequency on the phase/frequency detector IC113, pin 3 is slightly lower than 100 Hz, the programmable divider is apparently ok.

   b. If the frequency on the input terminal "Loop 2 in" is approx. 100 kHz and the frequency on the phase/frequency detector IC113, pin 3 is slightly higher than 100 Hz, the programmable divider is apparently ok.

4. Check the phase/frequency detector IC113.

   a. Measure 1.5V DC on the terminal "PD2 (1.5V)" on the divider unit.

   b. If the input frequency on IC113, pin 3 is lower than 100 Hz and the DC voltage on the terminal "PD2 out" on divider unit is approx. 0.7V, the phase/frequency detector is apparently ok.

   c. If the input voltage on IC113 is higher than 100 Hz and the DC voltage on the terminal "PD2 out" on divider unit is approx. 2.3V the phase/frequency is apparently ok.

5. Check the integrator IC601 on VCXO and Loop 2 filter.

   a. If the DC voltage on the terminal "PD2 in" is approx. 0.7V and the DC voltage on output terminal of IC601, pin 6 is approx. 17V, the integrator IC601 is apparently ok.

   b. If the DC voltage on the terminal "PD2 in" is approx. 2.3V and the DC voltage on the output terminal of IC601, pin 6 is approx. 1V, the integrator IC601 is apparently ok.

6. If the failure has not yet been found the 100 Hz loop filter must be checked.

4. PERFORMANCE CHECK FOR S1303/04

Before executing the performance check the exciter must be connected to the power supplies +22V, +8V, and -45V (N1405) via the testbox S1303/04 and the artificial key for S1303/04. These two test boxes must be connected in series. The RF output connector must be loaded with 50 ohm.

It is necessary to change the proms IC702, IC2114, IC2115 with the supplied test proms.

The test proms have the following check sums: IC702 "OFDA", IC2114 "D674", IC2115 "DD6C".

The following performance check steps start with the selected frequency and the selected modulation mode of the exciter, e.g. A1, tune.

4.1.
DC CONTROL

4.1.1.
Connect voltmeter to TP1.

4.1.2.
Check the voltage to be within 18V +-0.2V.

4.1.3.
Connect voltmeter to TP2.

4.1.4.
Check the voltage to be within -18V +-0.2V.

4.1.5.
Connect voltmeter between TP1 and TP3.

4.1.6.
Check the voltage to be within 100 mV.

4.1.7.
Connect voltmeter to TP31.

4.1.8.
Check the voltage to be within 5V +-0.2V.

4.1.9.
Connect voltmeter to TP33.

4.1.10.
Check the voltage to be within 5V +-0.2V.

4.2.
TCXO CONTROL

4.2.1.
Connect frequency counter to TP4.

4.2.2.
Check the frequency to be within 10 000 000 Hz +-1 Hz.

4.3.
KEYBOARD AND DISPLAY.

4.3.1.
Press the keyboard C, the display shows 000000.

4.3.2.
Press the keyboard 1 six times. The display shows 111111.

4.3.3.
Repeat 4.3.2. for 0.2.3.4..... and 9.

4.3.4.
Press the keyboard point. The display shows 99999.0.

4.3.5.
Press the keyboard 9. The display shows 99999.9.

4.3.6.
Check that the illegal frequency lamp is illuminated.

4.3.7.
Set the switch on the artificial key in position OFF.

4.3.8.
Set the display input switch in position EXT.FRQ.CONTROL.

4.3.9.
Check that the display is empty except for the point, and that the EXT.FRQ.CONTROL lamp is illuminated.

4.3.10.
Set the switch on the artificial key in position ON.

4.3.11.
Check that the display shows 00000.0.

4.3.12.
Set the display input switch in position 2182 kHz selected.

4.3.13.
Check that the display shows 02182.0.

4.3.14.
Set the display input switch in position keyboard.

4.4.
VCO SELECTOR:

The band select output code is controlled.

4.4.1.
Set the frequency to 8500.0 kHz.

4.4.2.
Check that the diodes on the testbox indicates the code

ZYXVZ
01010

where a "1" represents an illuminated diode.

4.4.3.
Set the frequency to 19000.0 kHz.

4.4.4.
Check that the diode on the testbox indicates the code.

ZYXVZ
10101

where a "1" represents an illuminated diode.

4.4.5.
Set the frequency to 26000.0 kHz.

4.4.6.
Check that the 2182.0 kHz lamp is alight.

4.4.7.
Activate the key switch on the testbox.

4.4.8.
Check that the transmitter starts and the simplex relay lamps are alight.

4.4.9.
Activate the 22V for dummy switch on the testbox.

4.4.10.
Check that the PA block lamp on the testbox is alight.

4.4.11.
Set the 22V for dummy switch in neutral position.

4.5.
HARMONIC FILTER AND VCO.

Load TP26 with 68 ohm.

4.5.1.
Connect frequency counter to TP30.

4.5.2.
Connect voltmeter to TP6.
Connect voltmeter to TP7.

4.5.3.
Go through the frequencies indicated in fig. 1 and check the above mentioned test points.

4.5.4.
In the A positions read 4698 kHz.
In the B positions read 2699 kHz.

4.5.5.
In all positions check that the TP6 voltage is below 3.5V.

4.5.6.
In A positions check that the TP7 voltage is 15V +-1V and in B positions check that the TP7 voltage is above 5.0V.

4.5.7.
Disconnect the 68 ohm load from TP26.

VCO under test	Pos.	Freq.select
L315	A	1999.0
	B	0000.0
L313	A	3999.0
	B	2000.0
L314	A	5999.0
	B	4000.0
L306	A	7999.0
	B	6000.0
L304	A	9999.0
	B	8000.0
L305	A	13999.0
	B	12000.0
L309	A	17999.0
	B	16000.0
L307	A	23999.0
	B	22000.0
L308	A	25999.0
	B	24000.0

Fig. 1

4.6.
STEP RESPONSE.

4.6.1.
Connect oscilloscope to TP7.

4.6.2.
Set the frequency to 2400.9 kHz, short-circuit black/yellow control wire on divider board to ground. Step response is seen on oscilloscope, compare to fig. 2.

4.6.3.
Connect oscilloscope to TP8.

4.6.4.
Set the frequency to 2400.9 kHz, short-circuit grey control wire on divider board to ground. Step response is seen on oscilloscope, compare to fig. 3.

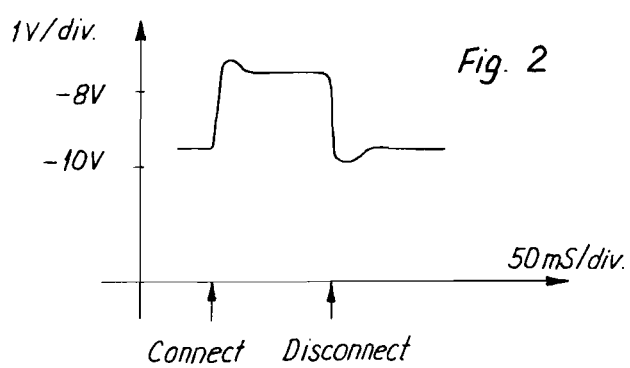

Fig. 2

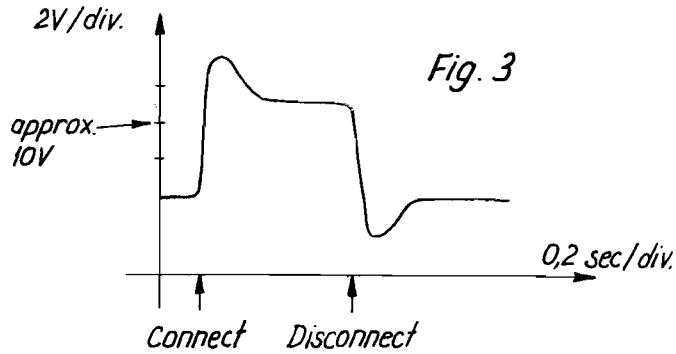

Fig. 3

4.7.
LEVEL CHECK

4.7.1.
Connect oscilloscope to TP29 via 1:10 probe.

4.7.2.
Check the voltage to be above 1.7Vpp at the frequency 2000.5 kHz.

4.7.3.
Connect oscilloscope to TP27 via 1:10 probe.

4.7.4.
Check the voltage to be above 1.6Vpp at the frequency 2000.5 kHz.

4.7.5.
Connect oscilloscope to TP28 via 1:10 probe.

4.7.6.
Check the voltage to be above 2.5Vpp at the frequency 2000.5 kHz.

4.7.7.
Connect voltmeter to TP8.

4.7.8.
Check the voltage to be within 6V to 11V at the frequency 2000.5 kHz.

4.7.9.
Check the voltages to be below 14.5V at the frequency 2000.0 kHz.

4.7.10.
Check the voltage to be above 4V at the frequency 2000.9 kHz.

4.8.
MICROPHONE AMPLIFIER.

4.8.1.
Connect oscilloscope to TP12.

4.8.2.
Set the frequency to 2000.5 kHz and the mode switch to A3J (J3E), connect the tone generator (1000 Hz) to the testbox.

4.8.3.
Adjust the tone generator output voltage from a minimum, until the level at TP12 is just constant. This limitation must happen at approx. 1Vpp measured at TP25.

4.8.4.
Add 10 dB to tone generator (3.16Vpp) and check that the measured signal is approx. symmetrical clipped.

4.8.5.
The attack- and decay time of the microphone amplifier is measured on TP24, connect the oscilloscope to this TP.

4.8.6.
By connection and disconnection of the tone generator signal the measured voltage must be as shown on fig. 4a and b.

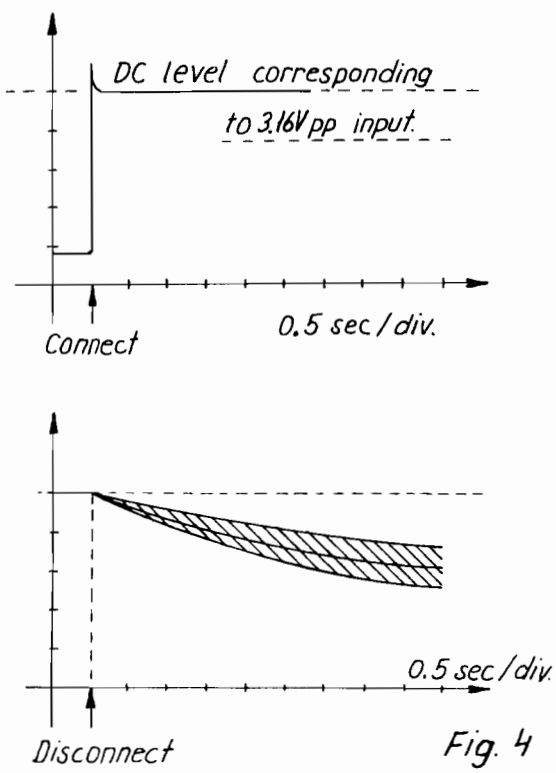

Fig. 4

4.9.
OUTPUT LEVEL

4.9.1.
Connect oscilloscope to TP21 via 1:10 probe.

4.9.2.
Set the frequency to 2000.5 kHz, tune, full power and power level potentiometer fully clockwise.
Measure the output voltage to be within 4.2Vpp and 4.8Vpp.

4.9.3.
With the tune button activated, control that the tune lamp on the front plate is alight, and that the SIMPLEX RELAY lamp on the testbox is alight.

4.9.4.
Connect TP24 to ground.

4.9.5.
Press the tune button and adjust the power level potentiometer until there is full deflection (8 cm) on the oscilloscope. The output signal is symmetrical clipped.

4.9.6.
Disconnect TP24 from ground, the output signal seen on the oscilloscope is 7 cm and the signal is not clipped.

4.10.
POWER REDUCTION.

4.10.1.
Connect diode probe to TP21.

4.10.2.
Set the frequency to 2.000,0 kHz, A3H (H3E), full power, and activated key, check that the power level potentiometer on the testbox can change the output RF level between 10 and 13 dB.

4.10.3.
With power level potentiometer on the testbox fully clockwise, check the first power reduction step to be between 4 dB and 6 dB below full power, the second step 8 dB, the third step 12 dB to 18 dB and the fourth step 17 dB to 23 dB below full power.

4.10.4.
Check that the power reduction lamp is alight when the output power is reduced.

4.11.
A3H, A3A, A2H, A1 and TELEX.

4.11.1.
Connect oscilloscope to TP21 via 1:10 probe.

4.11.2.
Select 2000.5 kHz, tune and full power, adjust power level potentiometer until there is full deflection (8 cm) on oscilloscope screen.

4.11.3.
Change to A3H without modulation. Check A3H carrier, now seen to be within 4 cm and 5 cm.

4.11.4.
Connect tone generator, 1000 Hz and 3Vpp to microphone plug.

4.11.5.
Check the output in A3H, A3A, A2H and A3J to be within 7 cm pp. and 8 cm pp. on oscilloscope.

4.11.6.
Check the output in A1 to be within 5 cm pp. and 6.4 cm pp. on the oscilloscope.

4.11.7.
Select 2000.5 kHz and A3J. Connect tone generator, 1500 Hz and 3Vpp to the microphone plug and adjust the output level to full deflection (8 cm) on the oscilloscope screen. Connect tone generator to the artificial key.

4.11.8.
Select 2000.5 kHz and telex, and check that the peak amplitude of the output signal is within 7 cm pp. and 8 cm pp. on the oscilloscope.

4.11.9.
Connect pin 3 and pin 8 on IC1001 (mode switch board) and check that the peak amplitude of the output signal is within 5 cm pp. and 6 cm pp.

4.11.10.
Remove the pin 3 and pin 8 connection and press the tune knob for 10 secs.

4.11.11.
Check that the peak amplitude of the telex signal again is 7-8 cm pp.

4.12.
A2H OSCILLATOR AND DELAY UNIT.

4.12.1.
Connect frequency counter to TP32, and check the frequency to be within 455 Hz to 475 Hz in A2H position.

4.12.2.
Connect oscilloscope to TP21, and tone generator to the artificial key. Tone generator output: 1500 Hz and 3Vpp.

4.12.3.
Select 2000.5 kHz and telex, trig the oscilloscope from the artificial key, and check the output envelope on the oscilloscope with the figure below.

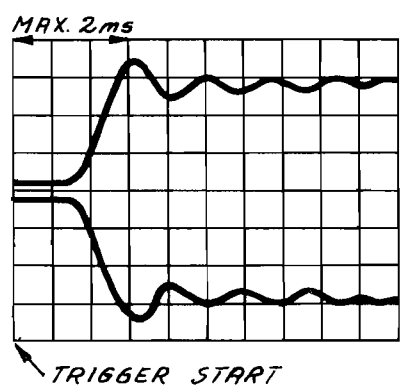

4.12.4.
Select 2000.5 kHz, A1 and oscilloscope sensitivity to 0.1V/div., adjust power level potentiometer until the steady state level is 8 cm pp. on the screen.

4.12.5.
Trig the oscilloscope from the artificial key and check the output envelope on the oscilloscope with the figure below.

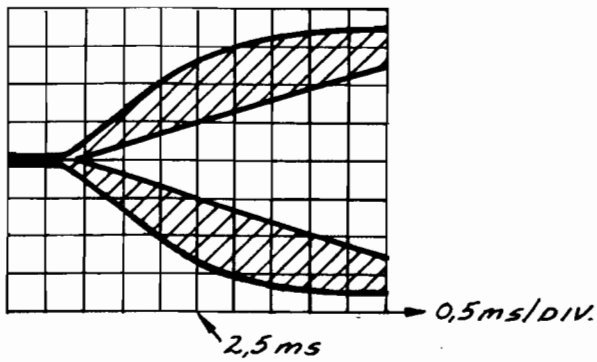

4.12.6.
Trig the oscilloscope on the opposite edge and check the output envelope with the figure below.

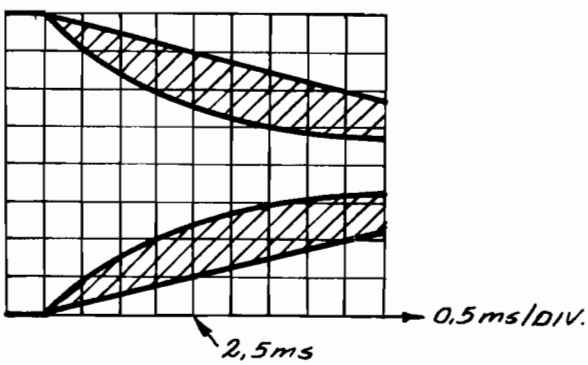

4.12.7.
Change sweep rate to 2 mS/div. and check the +22V from delay as indicated on the figure below.

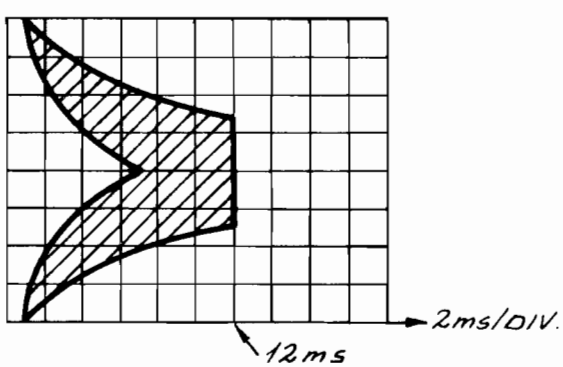

4.12.8.
Connect the oscilloscope to TP35 and trig the oscilloscope from the artificial key. Load TP35 with 1 kohm.

4.12.9.
Check that the RX block pulse stays at +22V for a time period between 6 msecs and 20 msecs after key-off.

4.13.
BANDPASS FILTER UNIT

Lowpass filters and bandpass filters are checked as described in adjustment procedure 5.11.

4.14.
ALARM TONE GENERATOR

4.14.1.
Connect oscilloscope to TP22 via 1:10 probe.

4.14.2.
Activate the alarm test button. On the oscilloscope a 5.0Vpp square wave is seen. Control that the frequency is 2.0 Hz (500 msecs).

4.14.3.
Connect oscilloscope to TP11 via a 1:10 probe.

4.14.4.
Activate the alarm test button. Control that a voltage of 22V DC with a 1.2Vpp square wave is seen on the scope.

4.14.5.
Connect the counter to TP11 via 1:10 probe.

4.14.6.
Connect TP22 to ground (pin 8 of IC1308). Check the frequency to be 1300 Hz +-10 Hz.

4.14.7.
Connect TP22 to +5V DC (pin 14 of IC1304). Check the frequency to be 2200 Hz +-15 Hz.

Under the performance check that the alarm tone generator will stop after 45 secs. For restart, release test alarm push button and activate it again.

4.15.
FREQUENCY RESPONSE

Frequency responses from LF input (on testbox) to the RF output is measured as described in adjustment procedure 5.9.1. and 5.9.3.

4.16.
DISTRESS

4.16.1.
Connect the oscilloscope to TP21. Switch the frequency to 2182.0 kHz.

4.16.2.
Press alarm and test alarm at the same time.

4.16.3.
The distress signal can now be seen on the oscilloscope.
The time from start of alarm signal until it automatically disappears is checked by a watch to be approx. 45 secs. Control that the modulation index is at least 0.7.

4.16.4.
When the alarm tone signal is seen on the oscilloscope press the tune button and check that the peak to peak voltage now seen is approx. the same as that of the alarm tone signal.

4.17.
FREQUENCY SELECTION

4.17.1.
Change the proms IC702, IC2114 and IC2115 from the test prom to the prom supplied with the exciter.

4.17.2.
Press the A3H (H3E) button and disconnect the AF tone generator on the test box.

4.17.3.
Connect the frequency counter to TP21 via a 1:10 probe.

4.17.4.
With the frequencies shown below control the frequencies.

FREQ. (MHz)
2888.8
4444.4
12300.0
22200.0
25000.0
5999.0
16799.0

4.17.5.
Connect the oscilloscope to TP21 and switch the DISPLAY INPUT SWITCH to position 2182 selected.

4.17.6.
Control that the diode 2182 kHz selected is alight.

4.17.7.
Turn the POWER REDUCTION button counter clockwise and control by means of the oscilloscope that the power is not reduced and that the power reduction lamp is not alight.

4.17.8.
Set the DISPLAY INPUT SWITCH to position keyboard. Check that the illegal frequency lamp is alight.

4.17.9.
Set the frequency to 4125.0 kHz and check that the illegal frequency lamp is not alight.

4.18.
FREQUENCY CHECK (only S1304)

4.18.1.
Reconnect the plugs from the frequency, check unit on the frequency control unit.

4.18.2.
Key-in the frequencies of the frequency table placed beside the short wave set or in the operating instruction manual.

4.18.3.
Check that the illegal frequency lamp is not alight when an allowed frequency is keyed-in.

5. ADJUSTMENT PROCEDURE FOR S1303/04

Before executing adjustment procedure the exciter must be connected to the power supplies +22V, +8V and -45V via the testbox S1303/04 and the artificial key for S1303/04. These two test boxes are connected in series. The RF output connector must be loaded with 50 ohm.

It is necessary to change the PROM's IC702, IC2114, IC2115 with the supplied test points.

The following adjustment steps start with the selected frequency and the selected modulation mode of the exciter e.g. A1 tune.

The trimming cores are factory sealed. In order to break the seal - use normal cellulose thinner.

5.1.
DC ADJUSTMENTS.

5.1.1.
Connect voltmeter to TP1.

5.1.2.
Adjust R902 to +18V.

5.1.3.
Connect voltmeter to TP2.

5.1.4.
Adjust R209 to -18V.

5.1.5.
Connect voltmeter between TP1 and TP3.

5.1.6.
Adjust R214 to less than 100 mV.

5.2.
TCXO

5.2.1.
Connect frequency counter to TP4.

5.2.2.
Adjust R112 to 10 000 000 +-1 Hz.

5.3.
VCO OSCILLATOR.

5.3.1.
Disconnect the VCO output coaxial cable and connect a 50 ohm resistor to the VCO output terminal (VCO OUT).

5.3.2.
Connect a voltmeter to VCO CONTROL IN.

5.3.3.
Turn the core of each coil to the level of the coil former.

5.3.4.
Select each VCO coil unit by keying-in the frequencies listed below.

5.3.5.
The VCO coil unit is adjusted by turning the core of the selected coil until voltage reaches the value -15.0V +-1V.

fTX (MHz)	VCO coil
1.999	L315
3.999	L313
5.999	L314
7.999	L306
9.999	L304
13.999	L305
17.999	L309
23.999	L307
25.999	L308

5.3.6.
Connect an oscilloscope to the 50 ohm resistor at the VCO output terminals.

5.3.7.
Key-in the frequencies listed below and control that the oscilloscope voltage is 1.5Vpp +-0.4Vpp and control that the voltmeter shows -8 +-2V DC.

ADJUSTMENT PROCEDURE FOR S1303/04 cont.:

f_{TX} (MHz)	VCO coil
0.000	L315
2.000	L313
4.000	L314
6.000	L306
8.000	L304
12.000	L305
16.000	L309
22.000	L307
24.000	L308

5.3.8.
Disconnect the 50 ohm resistor at the VCO output terminals.
Connect the VCO output coaxial cable again.

5.4.
HARMONIC FILTERS.

5.4.1.
Load TP26 with 68 ohm.

5.4.2.
Connect voltmeter to TP7.

5.4.3.
Turn core of each coil to the level of the coil former.

5.4.4.
Select each harmonic filter by keying-in the frequencies specified in 5.4.11.

5.4.5.
The harmonic filters are adjusted by turning the core of the selected coil until the voltage reaches the value -15V +-1V.

5.4.6.
Connect voltmeter to TP6.

5.4.7.
Execute 5.4.11. and adjust each selected coil to minimum voltage (AGC-voltage). This voltage must be 1.5V +-0.5V.

5.4.8.
Connect voltmeter to TP7.

5.4.9.
Execute 5.4.11. and check that the voltage is -15V +-1V.

5.4.10.
Disconnect 68 ohm load.

5.4.11.

f_{TX} (MHz)	Selected harmonic filter (MHz)	
1.999	8	L403
3.999	10	L402
5.999	12	L401
7.999	14	L404
9.999	16	L405
13.999	20	L406
17.999	24	L407
23.999	30	L409
25.999	32	L408

5.5.
MICROPHONE AMPLIFIER.

5.5.1.
2000.5 kHz, A3J (J3E). Connect tone generator, 1000 Hz and 1Vpp measured on TP25.

5.5.2.
Connect oscilloscope to TP12.

5.5.3.
Turn R1201 fully counter clockwise and then clockwise until the measured level is just constant.

5.5.4.
Add 10 dB to tone generator output 1Vpp.

5.5.5.
Adjust R1224 for symmetrical clipping.

5.5.6.
Connect oscilloscope to TP13.

5.5.7.
Change to tune position.

5.5.8.
Adjust R1232 to 80 mVpp.

5.6.
SIGNAL PATH.

5.6.1.
2000.5 kHz, A3J (J3E), handset key on, with no input from tone generator. Connect oscilloscope to TP9 via 1:10 probe.

5.6.2.
Adjust L101, L1101, and L1102 for max.

5.6.3.
Adjust R1125 and C1123 for min. This adjustment must be repeated until the measured signal is almost a 1.2 MHz Sine.

5.6.4.
Turn power level potentiometer fully clockwise.

5.6.5.
Connect oscilloscope to TP23 via 1:10 probe.

5.6.6.
Adjust R1625 to min.

5.6.7.
2000.5 kHz, tune full power. Connect oscilloscope to TP21 via 1:10 probe. If the signal is clipped reduce output until it is undistorted.

5.6.8.
Adjust L1106, L601, L1603 and L1604 for max.

5.6.9.
Connect oscilloscope to TP6 via 1:10 probe.

5.6.10.
Turn R1149 fully clockwise.

5.6.11.
Adjust R1158 until there is full deflection (8 cm) on oscilloscope screen. The signal seen on the oscilloscope is symmetrical clipped.

5.6.12.
Adjust R1149 until the deflection seen on the oscilloscope is 7 cm. The signal seen is not clipped.

5.6.13.
Connect oscilloscope to TP17 via 1:10 probe and set the output to max. by turning the power level meter fully clockwise.

5.6.14.
Adjust R1158 to 350 mVpp.

5.6.15.
Connect oscilloscope to TP20 via 1:10.

5.6.16.
Adjust R1631 to 2.8 Vpp.

5.6.17.
Connect oscilloscope to TP21 via 1:10 probe.

5.6.18.
Adjust R1534 to 4.5 Vpp.

5.6.19. (USA version only)
Connect oscilloscope to TP20 via 1:10 probe.

5.6.20. (USA version only)
Adjust R1631 to 1.4 Vpp.

5.6.21. (USA version only)
Connect oscilloscope to TP21 via 1:10 probe.

5.6.22. (USA version only)
Adjust R1534 to 4.5 Vpp.

5.7.
A3H AND A2H LEVEL.

5.7.1.
Connect frequency counter to TP32.

5.7.2.
2000.5 kHz, A2H. Adjust L1801 to 465 Hz +-5 Hz.

5.7.3.
2000.5 kHz, tune and full power. Connect oscilloscope to TP21 via 1:10 probe.

5.7.4.
Adjust power level potentiometer to full screen (8 cm).

5.7.5.
Change to A3H without modulation. Adjust the A3H carrier now seen to 4.4 cm with R1109.

5.7.6.
Change to A2H and adjust R1806 until the A2H signal now seen is 8 cm pp.

5.7.7.
Connect oscilloscope to TP35 and trig the oscilloscope from the artificial key and load TP35 with 1 kohm.

5.7.8.
2000.5 kHz, A1. Adjust the voltage now seen to be +22V for a time period of 10 mS +-1 mS on the potentiometer R1819.

5.8.
ALARM GENERATOR.
No adjustments to be executed. For a performance check execute point 4.11 and 4.13.

The following filter adjustments must only be carried out when some repair is done around a filter.

5.9.
600 kHz SSB FILTER.

5.9.1.
2000.5 kHz, tune. Connect oscilloscope to TP21 via 1:10 probe.

5.9.2.
Adjust L1104 and L1105 for max.

5.9.3.
Control of filter response is carried out in mode A3J (J3E), with tone generator connected to the test box, output 3Vpp measured on TP25.

Frequency response is measured with diode probe on TP21. Max. permissible ripple is 2 dB in the frequency range 500 kHz - 2500 Hz, -6 dB frequencies are approx. 350 Hz and 2700 Hz.

5.9.4.
2000.5 kHz, TUNE. Turn the power level potentiometer fully clockwise. Go through 5.6.9. - 5.6.22. and 5.7.1. - 5.7.3.

5.10.
10.7 MHz FILTER.

5.10.1.
598.0 kHz, A3H (H3E) without modulation. Disconnect inner core of coaxial cable W1/6-16. 1 .

5.10.2.
Connect point 1 to point 5 on mixer-board with an external wire.

5.10.3.
Connect oscilloscope to TP19 via 1:10 probe.

5.10.4.
Adjust L1601 and L1602 to max.

5.10.5.
Adjust slightly L1601 and/or L1602 until the amplitude is the same within +-0.25 dB at the frequencies 595.0 kHz, 598.0 kHz and 601.0 kHz.

5.10.6.
Remove wire between 1 and 5 , reconnect W1/6-16.

5.10.7.
2000.5 kHz, tune. Turn the power level potentiometer fully clockwise, Go through 5.6.7. to 5.6.8. without the adjustment of L1106 and L601, and go through 5.6.13. - 5.6.22.

5.11.
LOWPASS FILTER AND BANDPASS FILTER UNIT.

5.11.1.
4500.0 kHz, A3H (H3E) without modulation. Disconnect the 50 ohm load at the RF output terminal and connect an oscilloscope to TP21 via a 1:1 probe.

5.11.2.
Disconnect the inner core of coaxial cable W1/15-16. Connect the inner core of coaxial cable W1/3-16 (the VCO-signal) to the point where the inner core W1/15-16 was connected.

5.11.3.
With max. sensitivity on the oscilloscope adjust L1501 to min. output voltage.

5.11.4.
Set the frequency to 9999.9 kHz.

5.11.5.
Adjust L1502 to min. output voltage.

5.11.6.
Reconnect the wires W1/15-16 and W1/3-16.

5.11.7.
6600.0 kHz, A3H (H3E) without modulation.

5.11.8.
Adjust L1503 to max. output voltage.

5.11.9.
9000.0 kHz, A3H (H3E) without modulation.

5.11.10.
Adjust L1504 to max. output voltage.

5.11.11.
Reconnect the 50 ohm load at the RF output terminal.

5.11.12
1600.0 kHz, A3H (H3E) without modulation, connect diode probe to TP21.

5.11.13.
Adjust power level potentiometer until 0.775V, corresponding to 0 dB on the decibel scale, is attained.
Set the frequency to 1800.0, 2400.0, 4299.0 and 6600.0 kHz and control that the output difference does not exceed 0.6 dB.

5.11.14.
8500.0 kHz, A3H (H3E) without modulation. Control that the output voltage is between -1 dB and +0.5 dB with reference to the adjustment in 5.11.13.

5.11.15.
A3H (H3E) without modulation.

5.11.16.
Set the frequency to A = 12330.0 kHz, B = 12491.0 kHz and C = 12652.0 kHz and execute 5.11.20.

5.11.17.
Set the frequency to A = 16460.0 kHz, B = 16660.0 kHz and C = 16859 kHz, and execute 5.11.20.

5.11.18.
Set the frequency to A = 22000.0 kHz, B = 22156.0 kHz and C = 22311.0 kHz, and execute 5.11.20.

5.11.19.
Set the frequency to A = 25070.0 kHz, B = 25090.0 kHz and C = 25110.0 kHz, and execute 5.11.20.

5.11.20.
The frequencies for the bandpass filter adjustments is chosen so that the center frequency is in position B, and band limits in position A and C.
Every single bandpass filter must be adjusted to max. output. The output must be within +-0.25 dB in A and C relative to B and the deflection on the center frequency position B must be between -1.0 dB and +0.5 dB with reference to the adjustment in 5.11.13.

5.11.21.
1A TUNE. Turn the power level potentiometer fully clockwise. Go through 5.6.15. - 5.6.22.

5.12.
OUTPUT FILTER.

5.12.1.
0000.0 kHz, A3H (H3E) without modulation. Connect oscilloscope to TP21 via 1:1 probe (wire).

ADJUSTMENT PROCEDURE FOR S1303/04
cont.:

5.12.2.
Disconnect the inner core of coaxial cable 2 W1/15-16. Connect the inner core of coaxial cable 5 W1/3-16 (the VCO signal) to the point where the inner core 2 W1/16-15 was connected.

5.12.3.
Connect the 6 brown/black wire to the 4 red/black wire on the band filter board.

5.12.4.
Turn the potentiometer R1534 fully counter clockwise.

5.12.5.
Adjust L1404, L1403 and L1401 to min. output voltage. This adjustment must be repeated until the measured signal is almost a 21.4 MHz sine signal.

5.12.6.
Reconnect the wires of point 5.12.2. - 5.12.3. at their proper place.

5.12.7.
2000.5 kHz, TUNE. Turn the power level potentiometer fully clockwise. Go through 5.6.17. - 5.6.22.

5.13.
VCO FILTER (only in USA).

5.13.1.
13.999,0 kHz, A3J (J3E). Connect oscilloscope to the inner core of coaxial cable 5 W1/3-16 (the VCO input to mixer unit).

5.13.2.
Disconnect the wires connected to the 6 MHz LP and 9 MHz LP on the VCO filter unit and connect the 6 MHz LP terminal to +18V DC.

5.13.3.
Adjust L2204 to minimum output.

5.13.4.
Set the frequency to 23300.0 kHz.

5.13.5.
Adjust L2202 to minimum output.

5.13.6.
Set the frequencies to 1600.0 kHz and 8500.0 kHz and control that the VCO signal is not attenuated through the VCO filter.

5.13.7.
Reconnect the wires of point 5.13.2. at their proper place.

6. NECESSARY ADJUSTMENTS AFTER REPAIR FOR S1303/04

In the following paragraphs is referred to the necessary adjustment - and performance check paragraphs in chapter 4 and 5.

6.1.
DIVIDER UNIT

Execute 4.1.7. - 4.1.18, 5.2. and adjust L101 as described in 5.6.1. and 5.6.2. Check 4.6., 4.9., 4.16. and 4.17.1. - 4.17.4.

6.2.
LOOP 1 FILTER & +-18V POWER SUPPLY

Execute 5.1.
Check 4.5., 4.6.1. and 4.6.2.

6.3.
VCO UNIT OR LOOP 1 MIXER

Execute 5.3.
Check 4.5., 4.6.1. - 4.6.2. and 4.17.1. - 4.17.4.

6.4.
HARMONIC FILTER

Execute 5.4.
Check 4.5. and 4.17.1. - 4.17.4.

6.5.
VCXO AND LOOP 2 FILTER

Execute 5.6.7. - 5.6.8. without adjusting L1106, L1603 and L1604.
Execute 5.6.15. - 5.6.22.
Check 4.6.3. - 4.6.4.
Check 4.7.5. - 4.7.10.

6.6.
VCO SELECTOR

Check 4.4. and 4.17.1. - 4.17.4.

6.7.
FILTER BOARD

Execute 5.1.1., 5.1.2., 5.1.5. and 5.1.6.

6.8.
MODE SWITCH

Perform a FUNCTION CHECK 7.

6.9.
SSB GENERATOR

Execute 5.6. without adjusting L101, L601, L1603 and L1604.
Execute 5.7.

6.10.
MICROPHONE AMPLIFIER

Execute 5.5., 5.6.9. - 5.6.22. and 5.7.
Check 4.8.

6.11.
ALARM SIGNAL GENERATOR

Check 4.14. and 4.16.

6.12.
OUTPUT FILTER

Execute 5.12.

6.13.
LP AND BP FILTER

Execute 5.11. and 5.6.15. - 5.6.22.
Check 4.17.1. - 4.17.4.

6.14.
MIXER UNIT

Execute 5.6.4. - 5.6.22. without adjusting L1106 and L601.

6.15.
A2H, OSCILLATOR AND DELAY UNIT

Execute 5.7. without adjusting R1109.

NECESSARY ADJUSTMENTS AFTER REPAIR FOR S1303/04 cont.:

6.16.
FREQUENCY CONTROL
Check 4.1.9. - 4.1.10, 4.3. and 4.17.
and perform a FUNCTION CHECK 7.

6.17.
POWER SWITCH
Perform a FUNCTION CHECK 7.

6.18.
VCO FILTER (only USA version)
Execute 5.13. and perform a FUNCTION
CHECK.

6.19.
KEYBOARD
Check 4.3. and perform a FUNCTION
CHECK 7.

6.20.
FREQUENCY CHECK
Check 4.18. and perform a FUNCTION
CHECK 7.

7. FUNCTION CHECK FOR S1303/04

7.1.1.
Connect the testbox S1303/04 and the artificial key S1303/04 to the exciter. Connect the power supplies and an AF tone generator to the testbox. The RF output connector must be loaded with 50 ohm.

7.1.2.
Connect the frequency counter to the RF output connector via 1:10 probe.

7.1.3.
Set exciter to A3H (H3E) full power, power level potentiometer on testbox fully clockwise and no modulation. Set the handset key placed on the testbox in position ON.

7.1.4.
Measure the RF output carrier frequency one in each band but in the CT band one frequency below and one frequency above 2 MHz.
Compare the measured frequencies to the frequency table, placed beside the short wave set or in the operating instruction manual.
The frequency accuracy must be within 1.0 ppm.

7.2.1.
Connect a diode probe to the RF output connector.

7.2.2.
Change to TUNE position and set the handset key on the testbox in off position.

7.2.3.
Go through the above mentioned channels and check the RF output voltage to be 3.7V +-0.3V.

7.2.4.
In tune position the tune lamp must be alight. The transmitter start - and simplex relay lamp on the testbox must be alight.

7.2.5.
Check that the power level potentiometer on the testbox has a control range of approx. 12 dB.

7.2.6.
Change to A3H (H3E).
With the power level potentiometer on the testbox fully clockwise, set the handset key on the testbox in ON position.
Check the first power reduction step to be between 4 dB and 6 dB below full power, the second step 8 dB to 12 dB, the third step 12 dB to 18 dB and the fourth step 17 dB to 23 dB below full power.

7.2.7.
Check that the power reduced lamp is alight when the power is reduced.

7.2.8.
Check that the power reduced switch is disabled when tune is activated.

7.3.1.
Change to A3J (J3E). Choose a channel in the CT band.

7.3.2.
Supply 1500 Hz and 3.16V RMS to the AF input plug on the testbox S1303/S1304.

7.3.3.
Adjust the power level potentiometer on the testbox until the meter deflection (diode probe connected to the RF output) is 2.45V corresponding to 0.0 dB.

7.3.4.
Change the AF tone generator frequency between 500 Hz and 2500 Hz, and check that the output amplitude ripple is below 2 dB.
Check that -6 dB frequencies are approx. 300 Hz and 2700 Hz.

7.3.5.
Set AF tone generator to 1500 Hz.

7.3.6.
Disconnect the diode probe and connect the oscilloscope to the RF output connector.

7.3.7.
Change to tune position.

7.3.8.
Adjust the power level potentiometer on the testbox until full deflection is seen on the oscilloscope screen (8 cm pp.).

7.3.9.
Check that the amplitude is within 7 cm pp. and 8 cm pp. in the positions A3J (J3E), A3H (H3E) and A3A (R3E).

7.3.10.
Supply 1500 Hz and 3.16V RMS to the AF input connector on the artificial key S1303/04.

7.3.11.
Check that the peak amplitude is within 7 cm pp. and 8 cm pp. in the positions TELEX and A2H. It can be necessary to activate the tune button a short moment.

7.3.12.
Check that the peak amplitude is within 5 cm pp. and 6 cm pp. in the position A1.

7.4.1.
Set the display input switch in position 2182 kHz selected.

7.4.2.
Press SEND ALARM and TEST ALARM at the same time. The distress signal can now be seen on the oscilloscope. The time from start of alarm signal until it automatically disappears must be 45 secs.

7.4.3.
Check that the power reduced switch is disabled under alarm transmission.

7.4.4.
Check that the 2182 kHz selected lamp is alight when the frequency selector is in position 1.

7.5.1.
Set the data/clock switch on the artificial key in position OFF.

7.5.2.
Set the display input switch in position EXT.FREQ.CONTROL.

7.5.3.
Check that the display is blank.

7.5.4.
Set the data/clock switch on the artificial key in ON position.

7.5.5.
Check that the display is filled with zeroes.

7.6.1.
Check that the dimmer switch is working.

BOTTOM VIEW

BC639
BC640

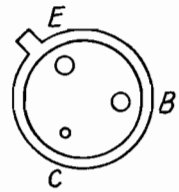

BFW 17A

BC 328-25
BC 338
BC 547
BC 548 A, B, C
BC 556 A,
BC 558 A, B, C,

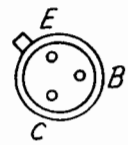

2N 2368

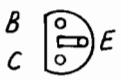

BF 199
BF 494

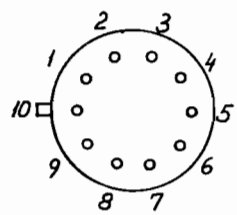

CA 3019

BF 256 A, B, C

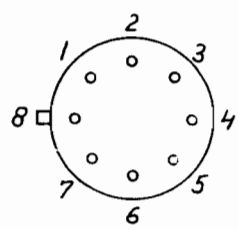

LM 3053

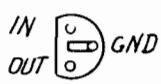

MC 78 L05 ACP

TOP VIEW

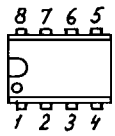

LM 308 N
LM 358

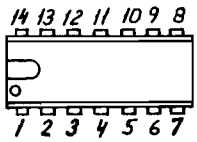

LM 329
MC 4044
MC 14081 B CP
SN 7407 N
SN 7410 N
SN 7472 N
SN 74 LS 20 N
SN 74 LS 27 N
SN 74 LS 290 N
SN 74 LS 197 N
SN 74 LS 32 N

SN 74 LS 86 N
SN 74 LS 00 N
SN 74 LS 08 N
SN 74 LS 74 N
SN 74 06
MC 14071 BCP
MC 14082 BCP
MC 14073 BCP
MC 14011 BCP

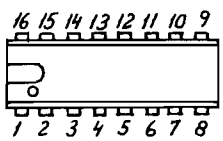

SN 74 LS 109 N
SN 74 LS 192 N
SN 74 LS 390 N
SN 74 LS 138 N
SN 74 LS 195 N
SN 74 LS 83 N
SN 74 LS 148 N
SN 74 LS 173 N

SN 74 LS 151 N
SN 74 LS 123 N
SN 74 LS 85 N
MC 14040 BCP
MC 14027 BCP
CD 4056 B
MMI 6330-1

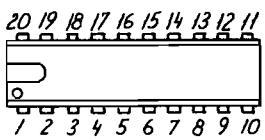

MMI 6308-1

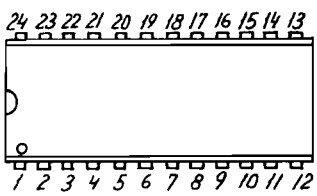

MC 14515 BCB

FRONT VIEW

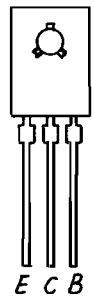

BD 138
BD 139

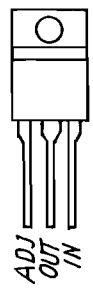

LM 317 T

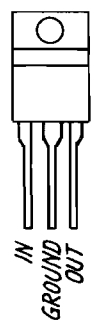

MC 7805 CT

TEST POINT LOCATIONS S1303/04

TP:	MODULE	
1.	Filter module: +18V DC out	(900)
2.	Loop 1 filter & +-18V supply unit: -18V out	(200)
3.	Loop 1 filter & +-18V supply unit: +18V out	(200)
4.	Divider unit: 10 MHz TCXO out	(100)
5.	Divider unit: 600 kHz output signal	(100)
6.	Harmonic filter: V_{AGC}	(400)
7.	Loop 1 filter & +-18V supply unit: VCO control out	(200)
8.	VCXO and loop 2 filter: Control voltage	(600)
9.	SSB-Generator: DSB signal to LSB filter	(1100)
10.		
11.	Alarm tone generator: Alarm tone signal out.	(1300)
12.	Microphone amplifier: Amplifier output	(1200)
13.	Microphone amplifier: AF signal output	(1200)
14.	SSB-Generator: 600 kHz carrier amp.	(1100)
15.	SSB-GENERATOR: 600 kHz to modulator balance	(1100)
16.	SSB-GENERATOR: SSB output signal	(1100)
17.	Mixer unit: 10.7 MHz filter output	(1600)
18.	Mixer unit: 10.7 MHz amplifier T1605 Basis	(1600)
19.	Mixer unit: 10.7 MHz 3. mixer input	(1600)
20.	Band-filter: Input to output amplifier	(1500)
21.	Output filter: RF signal out to PA	(1400)
22.	Alarm tone generator: 250 msecs control pulse	(1300)
23.	Mixer unit: 10.7 MHz filter input	(1600)
24.	Microphone amplifier: Compressor control voltage	(1200)
25.	Microphone amplifier: Microphone input	(1200)
26.	Harmonic filter: Harmonic filter out to loop 1 mixer	(400)
27.	VCXO and loop 2 filter: loop 2 mixer out	(600)
28.	VCXO and loop 2 filter: 10.0976 MHz out to 2. mixer	(600)
29.	VCO unit: VCO out to 3. mixer	(300)
30.	Divider unit: loop 1 input 2.7 - 4.7 MHz	(100)
31.	Divider unit: +5V input	(100)
32.	A2H-oscillator and delay unit: A2H oscillator collector	(1800)
33.	Frequency control: +5V input	(2100)
34.		
35.	A2H-oscillator and delay unit: RX-block out	(1800)

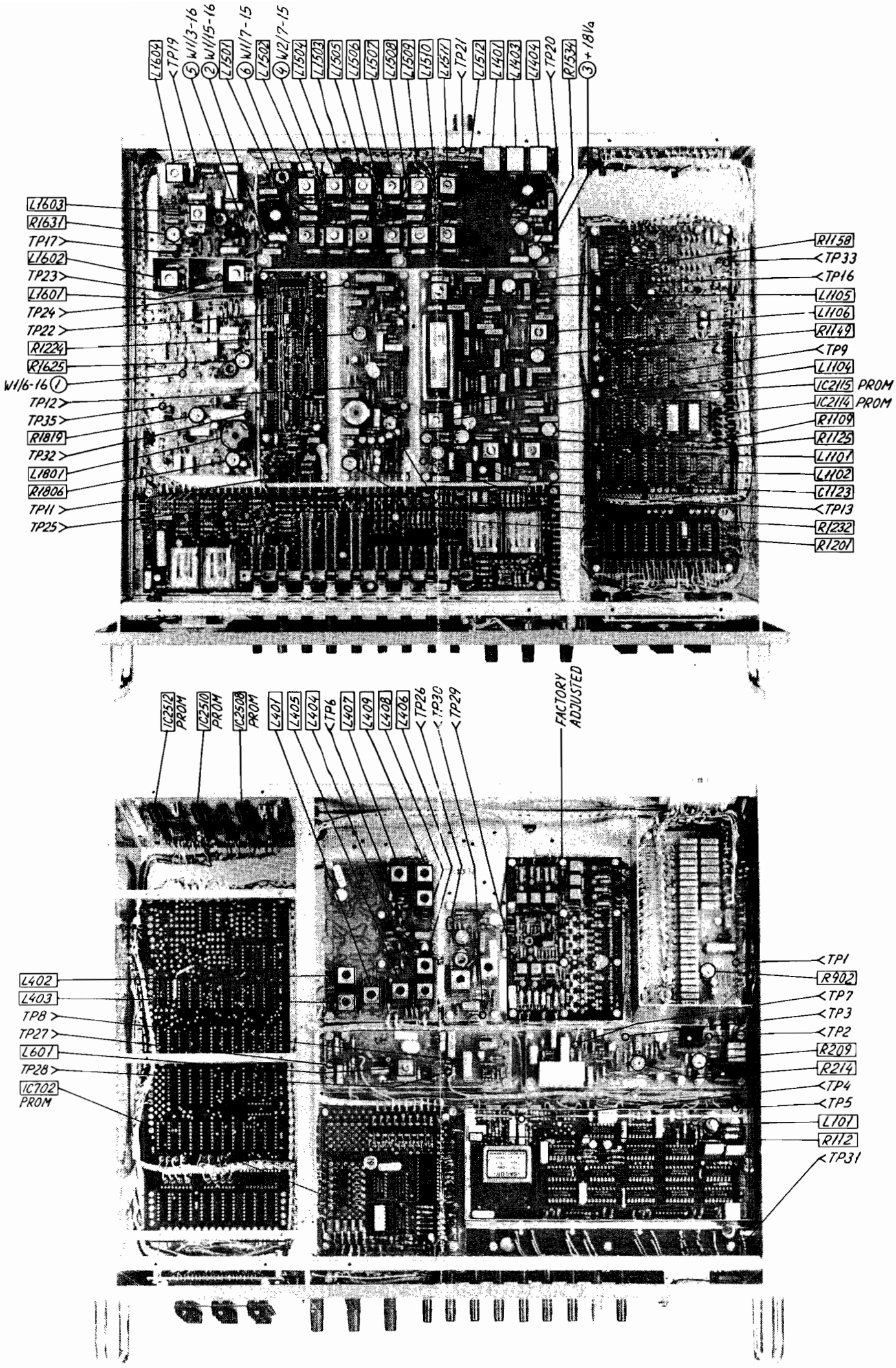

ADJUSTMENT LOCATION S1303/04

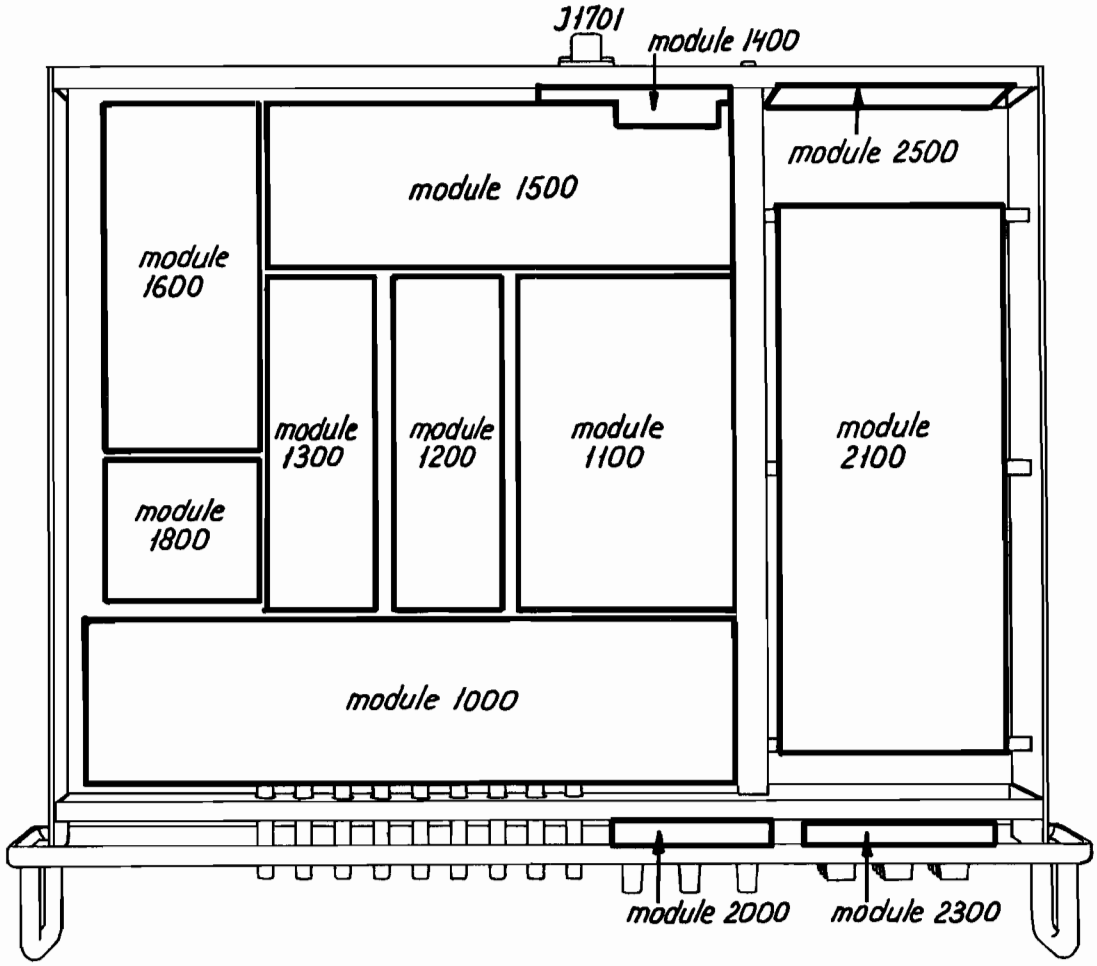

Chassismontage module 1700

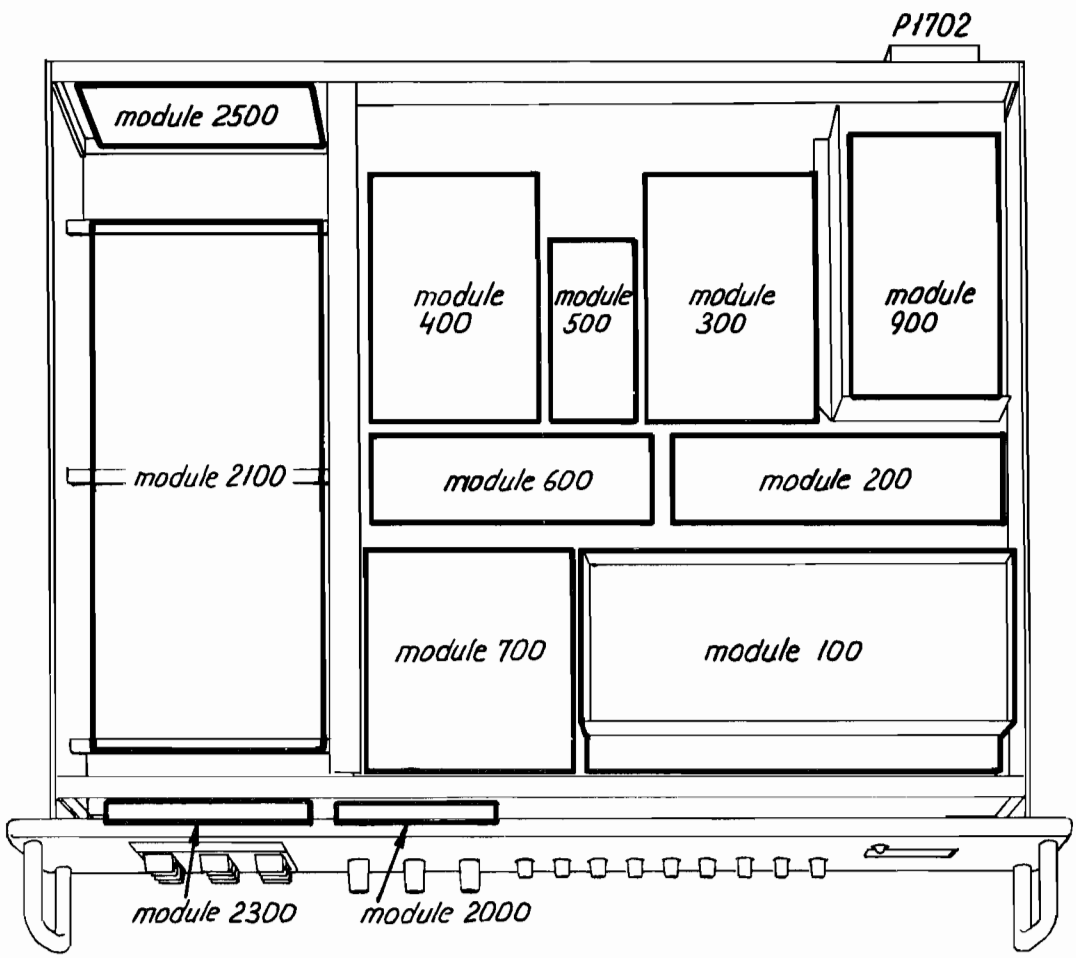

MODULE LOCATION S1303/04

4-6-23894 4-6-23895
4-6-23890A 4-6-23891B

MICROTELEPHONE INSTALLATION S1300

It is possible on request to get a special two microphone installation as described on the scematic diagram below.

NORMAL INSTALLATION WITH ONE MICROTELEPHONE

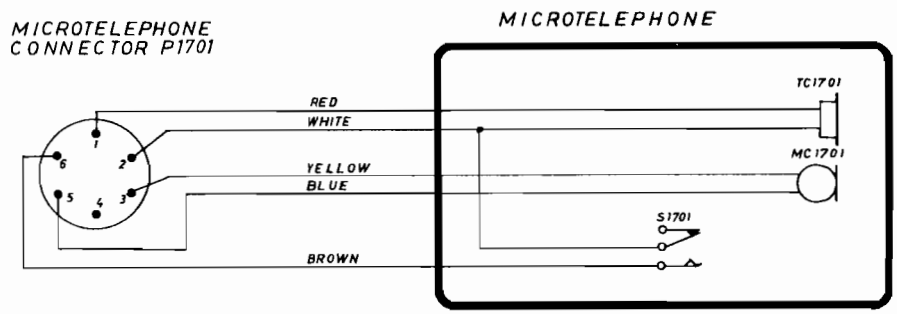

SPECIAL INSTALLATION WITH TWO MICROTELEPHONES

Microtelephone one with preference.

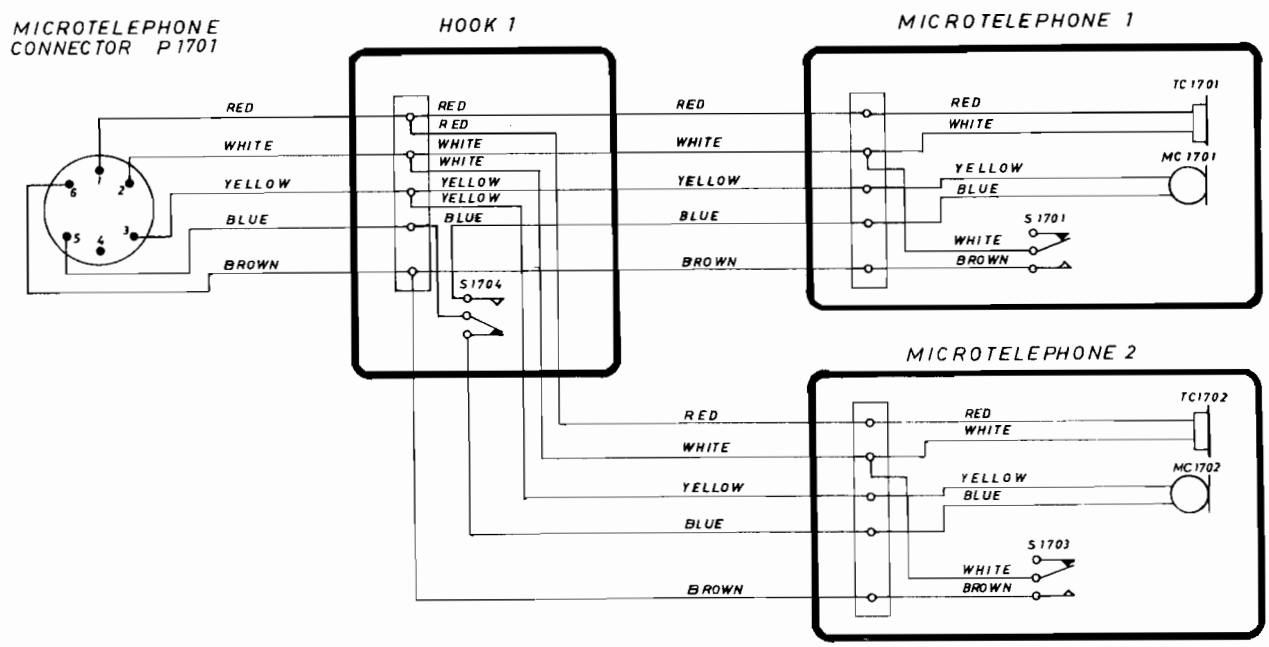

SPECIAL INSTALLATION WITH 3 MICROTELEPHONES

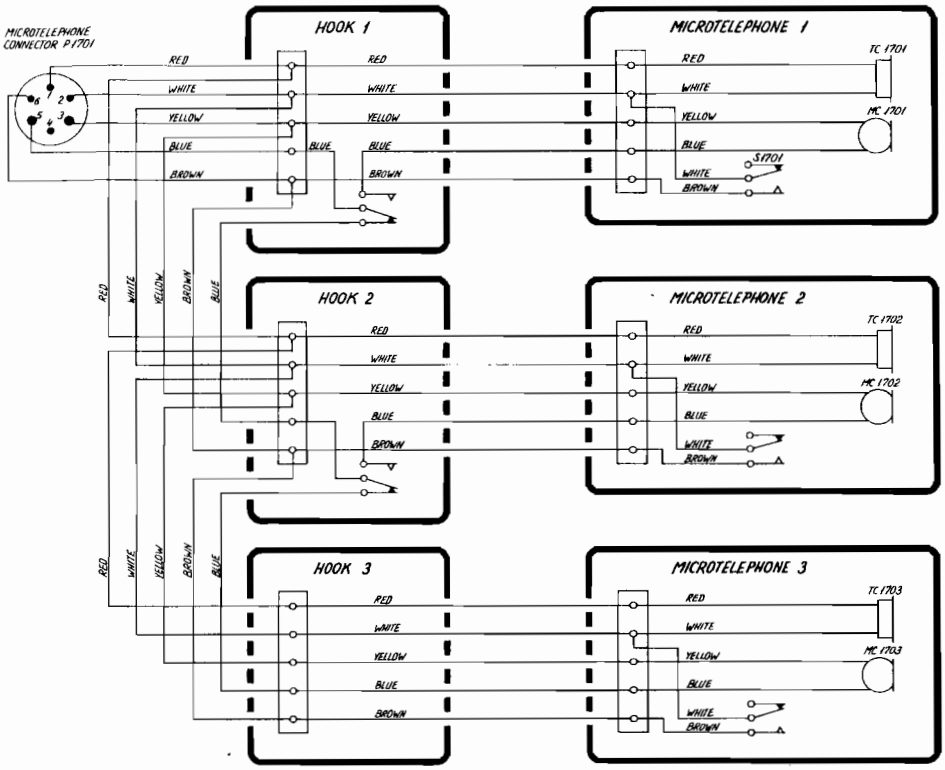

SPECIAL INSTALLATION WITH 4 MICROTELEPHONES

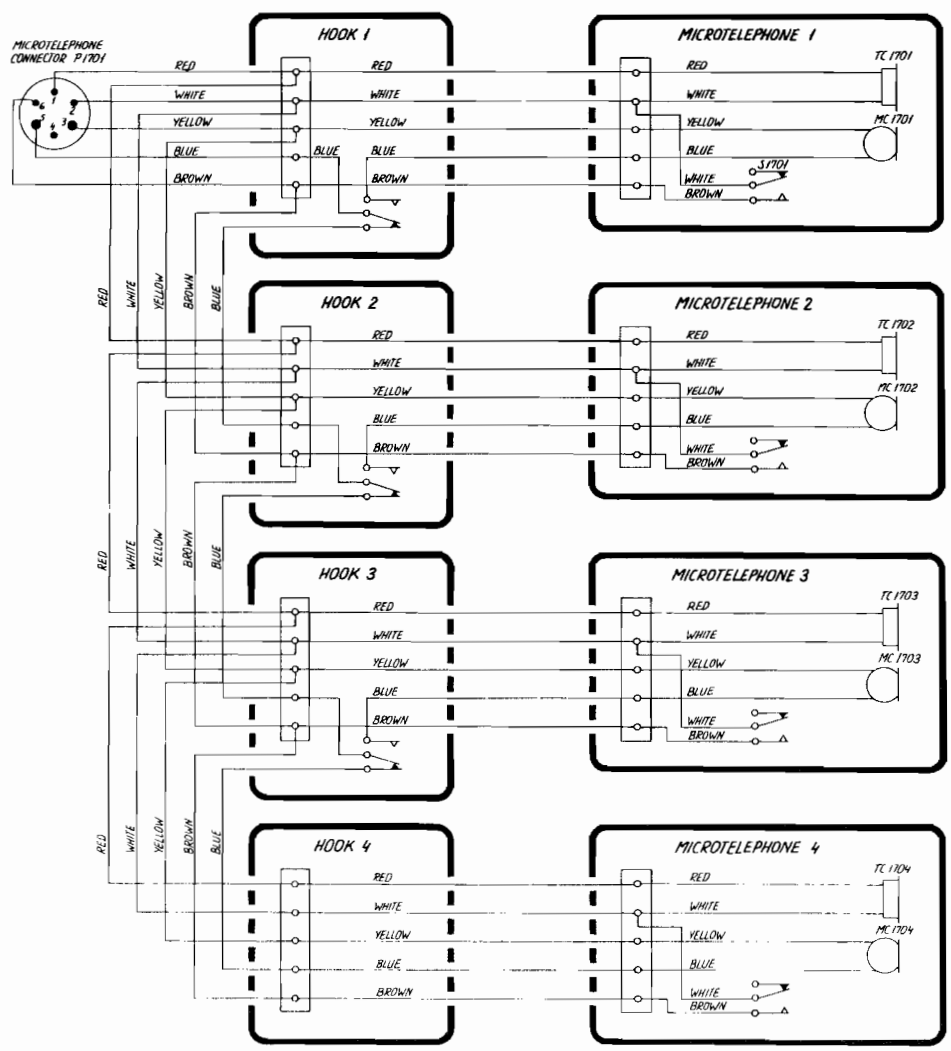

d DIVIDER UNIT S130X MODULE 100 1/3

Symbol	Description		Manufact.	
R101	Resistor	15Kohm ± 5% 0,33W	Philips	2322 211 13153
R102	Resistor	15Kohm ± 5% 0,33W	Philips	2322 211 13153
R103	Resistor	560 ohm ± 5% 0.33W	Philips	2322 211 13561
R104	Resistor	15Kohm ± 5% 0.33W	Philips	2322 211 13153
R105	Resistor	560 ohm ± 5% 0.33W	Philips	2322 211 13561
R106	Resistor	5,6Kohm ± 5% 0.33W	Philips	2322 211 13562
R107	Resistor	1,8Kohm ± 5% 0.33W	Philips	2322 211 13182
R108	Resistor	10Kohm ± 5% 0.33W	Philips	2322 211 13103
R109	Resistor	1,8Kohm ± 5% 0.33W	Philips	2322 211 13182
R110	Resistor	820 ohm ± 5% 0.33W	Philips	2322 211 13821
R111	Resistor	220 ohm ± 5% 0.33W	Philips	2322 211 13221
R112	Preset potentiometer	2Kohm ± 10% 0.5W	Bourns	3299 W-1-202
R113	Resistor	820 ohm ± 5% 0.33W	Philips	2322 211 13821
R114	Resistor	470 ohm ± 5% 0.33W	Philips	2322 211 13471
R115	Resistor	10Kohm ± 5% 0.33W	Philips	2322 211 13103
R116	Resistor	1,2Kohm ± 5% 0.33W	Philips	2322 211 13122
R117	Resistor	2,2Kohm ± 5% 0.33W	Philips	2322 211 13222
R118	Resistor	560 ohm ± 5% 0.33W	Philips	2322 211 13561
R119	Resistor	22Kohm ± 5% 0.33W	Philips	2322 211 13223
R120	Resistor	270 ohm ± 5% 0.33W	Philips	2322 106 33271
R121	Resistor	1,8Kohm ± 5% 0.33W	Philips	2322 211 13182
R122	Resistor	10Kohm ± 5% 0.33W	Philips	2322 211 13103
R123	Resistor	220 ohm ± 5% 0.33W	Philips	2322 106 33221
R124	Resistor	2,2Kohm ± 5% 0.33W	Philips	2322 211 13222
R125	Resistor	1Kohm ± 5% 0.33W	Philips	2322 211 13102
R126	Resistor	220 ohm ± 5% 0.33W	Philips	2322 211 13221
R127	Resistor	680 ohm ± 5% 0.33W	Philips	2322 211 13681
R128	Resistor	12Kohm ± 5% 0.33W	Philips	2322 211 13123
R129	Resistor	6,8Kohm ± 5% 0.33W	Philips	2322 211 13682
R130	Resistor	1Kohm ± 5% 0.33W	Philips	2322 211 13102
R131	Resistor	220 ohm ± 5% 0.33W	Philips	2322 211 13221
RA101	Resistor array	8x10Kohm ± 5% 0,125W	ITT	VR8,10Kohm ±5%
RA102	Resistor array	8x10Kohm ± 5% 0,125W	ITT	VR8,10Kohm ±5%

MODULE NO: 100

F	DIVIDER UNIT S130X			MODULE 100	2/3
Symbol	*Description*			*Manufact.*	
C101	Capacitor, polyester	10nF ±20%	400V	Philips	2222 344 54103
C102	Capacitor, electrolytic	10uF 20%	35V	ROE	EKI00AA210F
C103	Capacitor, ceramic	10nF -20/+80% CL2	50VDC	NKE	DT 350 758L F 103 Z 50V
C104	Capacitor, ceramic	10nF -20/+80% CL2	50VDC	NKE	DT 350 758L F 103 Z 50V
C105	Capacitor, ceramic	10nF -20/+80% CL2	50VDC	NKE	DT 350 758L F 103 Z 50V
C106	Capacitor, ceramic	10nF -20/+80% CL2	50VDC	NKE	DT 350 758L F 103 Z 50V
C107	Capacitor, ceramic	12pF NP0+5%	400V	Ferroperm	9/0112.9
C108	Capacitor, ceramic	10nF -20/+80% CL2	50VDC	NKE	DT 350 758L F 103 Z 50V
C109	Capacitor, ceramic	10nF -20/+80% CL2	50VDC	NKE	DT 350 758L F 103 Z 50V
C110	Capacitor, ceramic	10nF -20/+80% CL2	50VDC	NKE	DT 350 758L F 103 Z 50V
C111	Capacitor, ceramic	10nF -20/+80% CL2	50VDC	NKE	DT 350 758L F 103 Z 50V
C112	Capacitor, ceramic	10nF -20/+80% CL2	50VDC	NKE	DT 350 758L F 103 Z 50V
C113	Capacitor, ceramic	10nF -20/+80% CL2	50VDC	NKE	DT 350 758L F 103 Z 50V
C114	Capacitor, ceramic	10nF -20/+80% CL2	50VDC	NKE	DT 350 758L F 103 Z 50V
C115	Capacitor, ceramic	10nF -20/+80% CL2	50VDC	NKE	DT 350 758L F 103 Z 50V
C116	Capacitor, ceramic	10nF -20/+80% CL2	50VDC	NKE	DT 350 758L F 103 Z 50V
C117	Capacitor, ceramic	10nF -20/+80% CL2	50VDC	NKE	DT 350 758L F 103 Z 50V
C118	Capacitor, ceramic	10nF -20/+80% CL2	50VDC	NKE	DT 350 758L F 103 Z 50V
C119	Capacitor, ceramic	10nF -20/+80% CL2	50VDC	NKE	DT 350 758L F 103 Z 50V
C120	Capacitor, ceramic	10nF -20/+80% CL2	50VDC	NKE	DT 350 758L F 103 Z 50V
C121	Capacitor, ceramic	10nF -20/+80% CL2	50VDC	NKE	DT 350 758L F 103 Z 50V
C122	Capacitor, ceramic	10nF -20/+80% CL2	50VDC	NKE	DT 350 758L F 103 Z 50V
C123	Capacitor, polyester	220nF ±20%	100V	Philips	2222 344 24224
C124	Capacitor, polyester	15nF ±20%	400V	Philips	2222 344 54153
C125	Capacitor, polyester	47nF ±20%	250V	Philips	2222 344 40473
C126	Capacitor, polyester	220nF ±20%	100V	Philips	2222 344 24224
C127	Capacitor, polyester	220nF ±20%	100V	Philips	2222 344 24224
C128	Capacitor, electrolytic	10uF -10/+100%	40V	Siemens	B41313-A7106-V
C129	Capacitor, electrolytic	10uF -10/+100%	40V	Siemens	B41313-A7106-V
C130	Capacitor, polyester	220nF ±20%	100V	Philips	2222 344 24224
C131	Capacitor, polyester	47nF ±20%	250V	Philips	2222 344 40473
C132	Capacitor, polyester	220nF ±20%	100V	Philips	2222 344 24224
C133	Capacitor, polyester	220nF ±20%	100V	Philips	2222 344 24224
C134	Capacitor, polyester	220nF ±20%	100V	Philips	2222 344 24224
C135	Capacitor, polyester	220nF ±20%	100V	Philips	2222 344 24224
C136	Capacitor, polystyrene	1,2nF ± 5%	63V	Philips	2222 424 21202
C137	Capacitor, polystyrene	6,8nF ± 5%	63V	Philips	2222 424 26802
L101	Coil			S.P.	TL235

c	DIVIDER UNIT S130X			MODULE 100	3/3
Symbol	*Description*			*Manufact.*	
D101	Diode, zener	12V ± 5%	0,4W	Philips	BZX79C12
D102	Diode, silicon			Philips	BAW62
T101	Transistor			Philips	2N2368
T102	Transistor			Philips	2N2368
T103	Transistor			Philips	BF199
T104	Transistor			Philips	2N2368
T105	Transistor			Philips	BF199
IC101	Integrated circuit			Texas	SN74LS192N
IC102	Integrated circuit			Texas	SN74LS192N
IC103	Integrated circuit			Texas	SN74LS192N
IC104	Integrated circuit			Texas	SN74LS192N
IC105	Integrated circuit			Texas	SN74LS192N
IC106	Integrated circuit			Motorola	MC4044P
IC107	Integrated circuit			Texas	SN74LS390N
IC108	Integrated circuit			Texas	SN74LS20N
IC109	Integrated circuit			Texas	SN74LS27N
IC110	Integrated circuit			Texas	SN74LS109N
IC111	Integrated circuit			Texas	SN74LS390N
IC112	Integrated circuit			Texas	SN74LS390N
IC113	Integrated circuit			Motorola	MC4044P
IC114	Integrated circuit			Texas	SN7410N
IC115	Integrated circuit			Texas	SN74LS290N
X0101	TCXO 10,0 MHz			S.P.	C1001
S101	Switch for 2182 (R1117 only)			Petrick	7-3-21412

MODULE NO: 200

c LOOP 1 FILTER & ±18V SUPPLY UNIT S13XX/R11XX Module 200 1/2

Symbol	*Description*		*Manufact.*	
R201	Resistor	1 Kohm ±5% 0,33W	Philips	2322 181 13102
R202	Resistor	82 ohm ±5% 0,33W	Philips	2322 181 13829
R204	Resistor	820 ohm ±5% 0,33W	Philips	2322 181 13821
R205	Resistor	2,2 Kohm ±5% 0,33W	Philips	2322 181 13222
R206	Resistor	12 Kohm ±5% 0,33W	Philips	2322 181 13123
R207	Resistor	1,2 Kohm ±5% 0,33W	Philips	2322 181 13122
R208	Resistor	3,3 Kohm ±5% 0,33W	Philips	2322 181 13332
R209	Preset potmeter cermet	2,2 Kohm ±10% 0,5W	Philips	2322 482 22222
R210	Resistor	10 Kohm ±5% 0,33W	Philips	2322 181 13103
R212	Resistor	10 Kohm ±5% 0,33W	Philips	2322 181 13103
R213	Resistor	10 Kohm ±5% 0,33W	Philips	2322 181 13103
R214	Preset potmeter cermet	2,2 Kohm ±10% 0,5W	Philips	2322 482 22222
R215	Resistor	3,3 Kohm ±5% 0,33W	Philips	2322 181 13332
R216	Resistor	1,5 Kohm ±5% 0,33W	Philips	2322 181 13152
R217	Resistor	10 Kohm ±5% 0,33W	Philips	2322 181 13103
R218	Resistor	3,3 Kohm ±5% 0,33W	Philips	2322 181 13332
R219	Resistor	2,7 Kohm ±5% 0,33W	Philips	2322 181 13272
R220	Resistor	560 ohm ±5% 0,33W	Philips	2322 181 13561
R221	Resistor	5,9 Kohm ±1% 0,25W	Vitrohm	471-0
R222	Resistor	22 Kohm ±5% 0,33W	Philips	2322 181 13223
R223	Resistor	150 ohm ±5% 0,33W	Philips	2322 181 13151
R224	Resistor	2,7 Mohm ±5% 0,33W	Philips	2322 181 13275
R225	Resistor	4,7 Kohm ±5% 0,33W	Philips	2322 181 13472
R226	Resistor	2,2 Kohm ±5% 0,33W	Philips	2322 181 13222
R227	Resistor	5,9 Kohm ±1% 0,25W	Vitrohm	471-0
R228	Resistor	5,9 Kohm ±1% 0,25W	Vitrohm	471-0
R229	Resistor	140 Kohm ±1% 0,25W	Vitrohm	471-0
	S13XX only			
R203	Resistor	270 Kohm ±5% 0,33W	Philips	2322 181 13274
R211	Resistor	15 ohm ±5% 0,33W	Philips	2322 181 13159
	R11XX only			
R203	Resistor	150 Kohm ±5% 0,33W	Philips	2322 181 13154
R211	Resistor	10 ohm ±5% 0,33W	Philips	2322 181 13109

e LOOP 1 FILTER & ±18V SUPPLY UNIT S13XX/R11XX Module 200 2/2

Symbol	*Description*			*Manufact.*	
C201	Capacitor ceramic	10nF	-20/+80% 50V	KCK	HE70SJYF103Z
C202	Capacitor electrolytic	10uF	20% 35V	ERO	EKI00AA210F
C203	Capacitor electrolytic	10uF	20% 35V	ERO	EKI00AA210F
C204	Capacitor electrolytic	10uF	20% 35V	ERO	EKI00AA210F
C205	Capacitor electrolytic	10uF	20% 40V	ERO	EB
C206	Capacitor electrolytic	10uF	20% 35V	ERO	EKI00AA210F
C207	Capacitor polycarbonate	470nF	±10% 100V	Philips	2222 344 21474
C208	Capacitor ceramic	10nF	-20/+80% 50V	KCK	HE70SJYF103Z
C209	Capacitor polystyrene	39nF	±1,25% 63V	Plessey	KS1.39
C210	Capacitor electrolytic	10uF	20% 35V	ERO	EKI00AA210F
C211	Capacitor polyester	6,8uF	±10% 100V	Philips	2222 344 25685
C212	Capacitor ceramic	220pF	±20% 400V	Ferroperm	9/0129,9
C213	Capacitor ceramic	220nF	±20% 400V	Ferroperm	9/0129,9
C214	Capacitor polyester	330nF	±5% 63V	ERO	MKT1822
C215	Capacitor polyester	150nF	±20% 100V	ERO	MKT1822
C216	Capacitor polyester	220nF	±20% 100V	ERO	MKT1822
C217	Capacitor polyester	220nF	±20% 100V	ERO	MKT1822
C218	Capacitor polyester	220nF	±20% 100V	ERO	MKT1822
T201	Transistor			Philips	BD139
T202	Transistor			Philips	BC548A
T203	Transistor			Philips	BD138
T204	Transistor			Philips	BC558
T205	Transistor			Philips	BC556A
T206	Transistor			Philips	BC548
D201	Diode, zener	4,7V	± 5% 0,4W	Philips	BZX79C4V7
D202	Diode, silicon			Philips	BAW62
D203	Diode, silicon			Philips	BAW62
D204	Diode, silicon			Philips	BAW62
D205	Diode, zener	4,7V	± 5% 0,4W	Philips	BZX79C4V7
D206	Diode, silicon			Philips	BAV21
IC201	Integrated circuit			National	LM308N
IC202	Integrated circuit			National	LM308N

POSITION	DESCRIPTION		MANUFACTOR		TYPE	S.P.NUMB
	VCO UNIT MODULE 300	S130X	ESPERA		5-0-24700D	607470
C1	CAPACITOR MKT	10nF 20% 100V	ERO	*	MKT 1826-310/01 6-G	11.168
C2	CAPACITOR TANTAL	10uF 20% 25V	ERO		ETPW-3F	14.145
C3	CAPACITOR CERAMIC	3p3F +-0.25pF NPO 500VDC	NKE		DT 350 758L CJ 3R3 C 500V FLAT PACK	15.521
C4	CAPACITOR CERAMIC	3p3F +-0.25pF NPO 500VDC	NKE		DT 350 758L CJ 3R3 C 500V FLAT PACK	15.521
C5	CAPACITOR MKT	10nF 20% 100V	ERO	*	MKT 1826-310/01 6-G	11.168
C6	CAPACITOR TANTALUM	3.3uF 20% 35V	ERO		ETP-2D	14.080
C7	CAPACITOR MKT	10nF 20% 100V	ERO	*	MKT 1826-310/01 6-G	11.168
C8	CAPACITOR POLYSTYRENE	160pF 1% 630V	#PHILIPS		2222 431 81601	10.406
C9	CAPACITOR MKT	10nF 20% 100V	ERO	*	MKT 1826-310/01 6-G	11.168
C10	CAPACITOR MKT	10nF 20% 100V	ERO	*	MKT 1826-310/01 6-G	11.168
C11	CAPACITOR MKT	1nF 10% 400VDC	SIEMENS		B32510-D6102-K000	11.360
C12	CAPACITOR MKT	10nF 20% 100V	ERO	*	MKT 1826-310/01 6-G	11.168
C13	CAPACITOR MKT	10nF 20% 100V	ERO	*	MKT 1826-310/01 6-G	11.168
C14	CAPACITOR TANTAL	10uF 20% 25V	ERO		ETPW-3F	14.145
C15	CAPACITOR MKT	10nF 20% 100V	ERO	*	MKT 1826-310/01 6-G	11.168
C16	CAPACITOR ELECTROLYTIC	10uF 20% 35VDC	ERO*		EKI 00 AA 210 F M9	14.512
C17	CAPACITOR TANTAL	10uF 20% 25V	ERO		ETPW-3F	14.145
C18	CAPACITOR TANTAL	10uF 20% 25V	ERO		ETPW-3F	14.145
C19	CAPACITOR TANTAL	10uF 20% 25V	ERO		ETPW-3F	14.145
C20	CAPACITOR TANTAL	10uF 20% 25V	ERO		ETPW-3F	14.145
C21	CAPACITOR TANTAL	10uF 20% 25V	ERO		ETPW-3F	14.145
C22	CAPACITOR TANTAL	10uF 20% 25V	ERO		ETPW-3F	14.145
C23	CAPACITOR TANTAL	10uF 20% 25V	ERO		ETPW-3F	14.145
C24	CAPACITOR TANTAL	10uF 20% 25V	ERO		ETPW-3F	14.145
C25	CAPACITOR TANTAL	10uF 20% 25V	ERO		ETPW-3F	14.145
C29	CAPACITOR MKT	10nF 20% 100V	ERO	*	MKT 1826-310/01 6-G	11.168
C30	CAPACITOR MKT	10nF 20% 100V	ERO	*	MKT 1826-310/01 6-G	11.168
C31	CAPACITOR MKT	10nF 20% 100V	ERO	*	MKT 1826-310/01 6-G	11.168
C32	CAPACITOR MKT	10nF 20% 100V	ERO	*	MKT 1826-310/01 6-G	11.168
C33	CAPACITOR MKT	10nF 20% 100V	ERO	*	MKT 1826-310/01 6-G	11.168
C34	CAPACITOR MKT	10nF 20% 100V	ERO	*	MKT 1826-310/01 6-G	11.168
C35	CAPACITOR MKT	10nF 20% 100V	ERO	*	MKT 1826-310/01 6-G	11.168
C36	CAPACITOR MKT	10nF 20% 100V	ERO	*	MKT 1826-310/01 6-G	11.168
C37	CAPACITOR MKT	10nF 20% 100V	ERO	*	MKT 1826-310/01 6-G	11.168
C44	CAPACITOR POLYSTYRENE	110pF 1% 630V	#PHILIPS		2222 431 81101	10.402
C45	CAPACITOR POLYSTYRENE	56pF 1% 630V	#PHILIPS		2222 431 85609	10.394
C46	CAPACITOR POLYSTYRENE	68pF 1% 630V	#PHILIPS		2222 431 86809	10.396
C47	CAPACITOR POLYSTYRENE	75pF 1% 630V	#PHILIPS		2222 431 87509	10.397
C48	CAPACITOR POLYSTYRENE	75pF 1% 630V	#PHILIPS		2222 431 87509	10.397

POSITION	DESCRIPTION		MANUFACTOR	TYPE	S.P.NUMB
C49	CAPACITOR POLYSTYRENE	75pF 1% 630V	#PHILIPS	2222 431 87509	10.397
C56	CAPACITOR CERAMIC	8.2pF +-0.5pF NPO 400V	FERROPERM	9/0112/9	15.563
C57	CAPACITOR CERAMIC	10pF 5% NPO 500VDC	NKE	DT 350 758L CH 100 J 500V FLAT PACK	15.565
C58	CAPACITOR CERAMIC	5.6 pF +-.5pF NPO 400V	FERROPERM	9/0112/9	15.545
C60	CAPACITOR CERAMIC	10pF 5% NPO 500VDC	NKE	DT 350 758L CH 100 J 500V FLAT PACK	15.565
C68	CAPACITOR POLYSTERENE	150pF 1% 630V	#PHILIPS	2222 431 81501	10.405
C69	CAPACITOR POLYSTYRENE	68pF 1% 630V	#PHILIPS	2222 431 86809	10.396
C70	CAPACITOR POLYSTYRENE	75pF 1% 630V	#PHILIPS	2222 431 87509	10.397
C71	CAPACITOR POLYSTYRENE	100pF 1% 630V	#PHILIPS	2222 431 81001	10.400
C74	CAPACITOR POLYSTYRENE	91pF 1% 630V	#PHILIPS	2222 431 89109	10.399
C75	CAPACITOR POLYSTYRENE	75pF 1% 630V	#PHILIPS	2222 431 87509	10.397
C76	CAPACITOR POLYSTYRENE	110pF 1% 630V	#PHILIPS	2222 431 81101	10.402
C77	CAPACITOR CERAMIC	2.2 pF +-.25pF NPO 250V	FERROPERM	9/0112/9	15.512
C78	CAPACITOR CERAMIC	2.2 pF +-.25pF NPO 250V	FERROPERM	9/0112/9	15.512
C79	CAPACITOR CERAMIC	2.2 pF +-.25pF NPO 250V	FERROPERM	9/0112/9	15.512
C80	CAPACITOR MKT	33nF 10% 250V	SIEMENS	B32510-D3333-K000	11.498
C81	CAPACITOR MKT	33nF 10% 250V	SIEMENS	B32510-D3333-K000	11.498
C82	CAPACITOR MKT	33nF 10% 250V	SIEMENS	B32510-D3333-K000	11.498
D1	DIODE SCHOTTKY	BAT 43	THOMSON-CSF	BAT43	27.600
D2	DIODE CAP. SELECTED	BB130 YELLOW DOT	00.753	C1067A	700934
D3	DIODE CAP. SELECTED	BB130 RED DOT	00.753	C1067A	700935
D4	DIODE CAP. SELECTED	BB130 YELLOW DOT	00.753	C1067A	700934
D5	DIODE CAP. SELECTED	BB130 RED DOT	00.753	C1067A	700935
D6	DIODE CAP. SELECTED	BB130 YELLOW DOT	00.753	C1067A	700934
D7	DIODE CAP. SELECTED	BB130 RED DOT	00.753	C1067A	700935
D8	DIODE CAP. SELECTED	BB130 YELLOW DOT	00.753	C1067A	700934
D9	DIODE CAP. SELECTED	BB130 YELLOW DOT	00.753	C1067A	700934
D10	DIODE CAP. SELECTED	BB130 YELLOW DOT	00.753	C1067A	700934
D14	DIODE	1N4148	ITT*	1N4148	25.131
D15	DIODE	1N4148	ITT*	1N4148	25.131
D16	DIODE	1N4148	ITT*	1N4148	25.131
D17	DIODE	1N4148	ITT*	1N4148	25.131
D18	DIODE	1N4148	ITT*	1N4148	25.131
D19	DIODE	1N4148	ITT*	1N4148	25.131
D20	DIODE	1N4148	ITT*	1N4148	25.131
D21	DIODE	1N4148	ITT*	1N4148	25.131
D22	DIODE	1N4148	ITT*	1N4148	25.131
D26	DIODE SWITCH	FACTORY SELECTED BA282	00.752	C1064A	700885
D27	DIODE SWITCH	FACTORY SELECTED BA282	00.752	C1064A	700885
D28	DIODE SWITCH	FACTORY SELECTED BA282	00.752	C1064A	700885
D29	DIODE SWITCH	FACTORY SELECTED BA282	00.752	C1064A	700885
D30	DIODE SWITCH	FACTORY SELECTED BA282	00.752	C1064A	700885

POSITION	DESCRIPTION		MANUFACTOR	TYPE	S.P.NUME
D31	DIODE SWITCH	FACTORY SELECTED BA282	00.752	C1064A	700885
D32	DIODE SWITCH	FACTORY SELECTED BA282	00.752	C1064A	700885
D33	DIODE SWITCH	FACTORY SELECTED BA282	00.752	C1064A	700885
D34	DIODE SWITCH	FACTORY SELECTED BA282	00.752	C1064A	700885
D38	DIODE SWITCH	FACTORY SELECTED BA282	00.752	C1064A	700885
D39	DIODE SWITCH	FACTORY SELECTED BA282	00.752	C1064A	700885
D40	DIODE SWITCH	FACTORY SELECTED BA282	00.752	C1064A	700885
FP1	FERRITE BEAD	Ø3.7xØ1.2x3.5mm GRADE 4B1	*PHILIPS	4322 020 34420	35.181
L4	COIL	TL446	S.P.RADIO	6-0-24743A	400446
L5	COIL	TL447	S.P.RADIO	6-0-24744A	400447
L6	COIL	TL445	S.P.RADIO	6-0-24742A	400445
L7	COIL	TL448	S.P.RADIO	6-0-24745A	400448
L8	COIL	TL449	S.P.RADIO	6-0-24746A	400449
L9	COIL	TL447	S.P.RADIO	6-0-24744A	400447
L13	COIL	TL443	S.P.RADIO	6-0-24740A	400443
L14	COIL	TL444	S.P.RADIO	6-0-24741A	400444
L15	COIL	TL442	S.P.RADIO	6-0-24739A	400442
R1	RESISTOR	1.2 KOHM 5% 0.33W	PHILIPS	2322 180 73122	01.703
R2	RESISTOR	18 KOHM 5% 0.33W	PHILIPS	2322 180 73183	01.732
R3	RESISTOR	1 KOHM 5% 0.33W	PHILIPS	2322 180 73102	01.701
R4	RESISTOR	2.7 KOHM 5% 0.33W	PHILIPS	2322 180 73272	01.711
R5	RESISTOR	39 KOHM 5% 0.33W	PHILIPS	2322 180 73393	01.740
R6	RESISTOR	1.2 KOHM 5% 0.33W	PHILIPS	2322 180 73122	01.703
R7	RESISTOR	560 OHM 5% 0.33W	PHILIPS	2322 180 73561	01.694
R8	RESISTOR	56 OHM 5% 0.33W	PHILIPS	2322 180 73569	01.669
R9	RESISTOR	220 OHM 5% 0.33W	PHILIPS	2322 180 73221	01.684
R10	RESISTOR	12 KOHM 5% 0.33W	PHILIPS	2322 180 73123	01.728
R11	RESISTOR	4.7 KOHM 5% 0.33W	PHILIPS	2322 180 73472	01.717
R12	RESISTOR	47 OHM 5% 0.33W	PHILIPS	2322 180 73479	01.667
R13	RESISTOR	47 OHM 5% 0.33W	PHILIPS	2322 180 73479	01.667
R14	RESISTOR	68 OHM 5% 0.33W	PHILIPS	2322 180 73689	01.671
R15	RESISTOR	220 OHM 5% 0.33W	PHILIPS	2322 180 73221	01.684
R16	RESISTOR	100 KOHM 5% 0.33W	PHILIPS	2322 180 73104	01.751
R17	RESISTOR	390 OHM 5% 0.33W	PHILIPS	2322 180 73391	01.690
R18	RESISTOR	82 OHM 5% 0.33W	PHILIPS	2322 180 73829	01.673
R19	RESISTOR	3.3 OHM 5% 0.33W	PHILIPS	2322 180 73332	01.638
R20	RESISTOR	47 OHM 5% 0.33W	PHILIPS	2322 180 73479	01.667
R21	RESISTOR	47 OHM 5% 0.33W	PHILIPS	2322 180 73479	01.667
R22	RESISTOR	47 OHM 5% 0.33W	PHILIPS	2322 180 73479	01.667
R23	RESISTOR	47 OHM 5% 0.33W	PHILIPS	2322 180 73479	01.667
R24	RESISTOR	47 OHM 5% 0.33W	PHILIPS	2322 180 73479	01.667
R25	RESISTOR	47 OHM 5% 0.33W	PHILIPS	2322 180 73479	01.667
R26	RESISTOR	47 OHM 5% 0.33W	PHILIPS	2322 180 73479	01.667
R27	RESISTOR	47 OHM 5% 0.33W	PHILIPS	2322 180 73479	01.667

POSITION	DESCRIPTION		MANUFACTOR	TYPE	S.P.NUMB
R28	RESISTOR	47 OHM 5% 0.33W	PHILIPS	2322 180 73479	01.667
R29	RESISTOR	47 OHM 5% 0.33W	PHILIPS	2322 180 73479	01.667
R30	RESISTOR	47 OHM 5% 0.33W	PHILIPS	2322 180 73479	01.667
R31	RESISTOR	47 OHM 5% 0.33W	PHILIPS	2322 180 73479	01.667
R32	RESISTOR	47 OHM 5% 0.33W	PHILIPS	2322 180 73479	01.667
R33	RESISTOR	47 OHM 5% 0.33W	PHILIPS	2322 180 73479	01.667
R34	RESISTOR	47 OHM 5% 0.33W	PHILIPS	2322 180 73479	01.667
R35	RESISTOR	47 OHM 5% 0.33W	PHILIPS	2322 180 73479	01.667
R36	RESISTOR	47 OHM 5% 0.33W	PHILIPS	2322 180 73479	01.667
R37	RESISTOR	47 OHM 5% 0.33W	PHILIPS	2322 180 73479	01.667
R44	RESISTOR	27 KOHM 5% 0.33W	PHILIPS	2322 180 73273	01.736
R45	RESISTOR	27 KOHM 5% 0.33W	PHILIPS	2322 180 73273	01.736
R46	RESISTOR	27 KOHM 5% 0.33W	PHILIPS	2322 180 73273	01.736
R47	RESISTOR	27 KOHM 5% 0.33W	PHILIPS	2322 180 73273	01.736
R48	RESISTOR	27 KOHM 5% 0.33W	PHILIPS	2322 180 73273	01.736
R49	RESISTOR	27 KOHM 5% 0.33W	PHILIPS	2322 180 73273	01.736
R50	RESISTOR	27 KOHM 5% 0.33W	PHILIPS	2322 180 73273	01.736
R51	RESISTOR	27 KOHM 5% 0.33W	PHILIPS	2322 180 73273	01.736
R52	RESISTOR	27 KOHM 5% 0.33W	PHILIPS	2322 180 73273	01.736
R56	RESISTOR	330 KOHM 5% 0.33W	PHILIPS	2322 180 73334	01.763
R57	RESISTOR	330 KOHM 5% 0.33W	PHILIPS	2322 180 73334	01.763
R58	RESISTOR	330 KOHM 5% 0.33W	PHILIPS	2322 180 73334	01.763
T1	TRANSISTOR	BF496	PHILIPS	BF496	28.200
T2	TRANSISTOR	FET TIS 88 A4	MOTOROLA	TM00 044-4	29.738
T3	TRANSISTOR	BC548B	ITT*	BC548B	28.076
T4	TRANSISTOR	BF199	PHILIPS	BF199	28.179
TR1	TRANSFORMER	TL207	S.P.RADIO	6-0-21360	400207

d HARMONIC FILTER UNIT S1300, S1301, S1302, S1303, S1304 Module 400 1/3

Symbol	Description				Manufact.	
C401	Capacitor ceramic	10 nF	-20/+80%	50V	KCK	HE70SJYF103Z
C402	Capacitor ceramic	10 nF	-20/+80%	50V	KCK	HE70SJYF103Z
C403	Capacitor ceramic	10 nF	-20/+80%	50V	KCK	HE70SJYF103Z
C404	Capacitor ceramic	10 nF	-20/+80%	50V	KCK	HE70SJYF103Z
C405	Capacitor ceramic	10 nF	-20/+80%	50V	KCK	HE70SJYF103Z
C406	Capacitor ceramic	10 nF	-20/+80%	50V	KCK	HE70SJYF103Z
C407	Capacitor ceramic	10 nF	-20/+80%	50V	KCK	HE70SJYF103Z
C408	Capacitor ceramic	10 nF	-20/+80%	50V	KCK	HE70SJYF103Z
C409	Capacitor ceramic	10 nF	-20/+80%	50V	KCK	HE70SJYF103Z
C410	Capacitor ceramic	10 nF	-20/+80%	50V	KCK	HE70SJYF103Z
C411	Capacitor ceramic	10 nF	-20/+80%	50V	KCK	HE70SJYF103Z
C412	Capacitor ceramic	10 nF	-20/+80%	50V	KCK	HE70SJYF103Z
C413	Capacitor ceramic	10 nF	-20/+80%	50V	KCK	HE70SJYF103Z
C414	Capacitor ceramic	10 nF	-20/+80%	50V	KCK	HE70SJYF103Z
C415	Capacitor ceramic	10 nF	-20/+80%	50V	KCK	HE70SJYF103Z
C416	Capacitor ceramic	10 nF	-20/+80%	50V	KCK	HE70SJYF103Z
C417	Capacitor ceramic	10 nF	-20/+80%	50V	KCK	HE70SJYF103Z
C418	Capacitor ceramic	10 nF	-20/+80%	50V	KCK	HE70SJYF103Z
C419	Capacitor polystyrene	360 pF	±2%	630V	Philips	2222 427 33601
C420	Capacitor polystyrene	240 pF	±2%	630V	Philips	2222 427 32401
C421	Capacitor polystyrene	220 pF	±2%	630V	Philips	2222 427 32201
C422	Capacitor ceramic	180 pF	±5% N150	50V	KCK	HE95SJPH181J
C423	Capacitor ceramic	180 pF	±5% N150	50V	KCK	HE95SJPH181J
C424	Capacitor ceramic	110 pF	±5% N150	50V	KCK	HE80SJPH111J
C425	Capacitor ceramic	100 pF	±5% N150	50V	KCK	HE80SJPH101J
C426	Capacitor ceramic	82 pF	±5% N150	50V	KCK	HE70SJPH820J
C427	Capacitor ceramic	91 pF	±5% N150	50V	KCK	HE70SJPH910J
C428	Capacitor ceramic	2.2 pF	±0.25 pF	250V	Ferroperm	9/0112.9
C429	Capacitor ceramic	2.2 pF	±0.25 pF	250V	Ferroperm	9/0112.9
C430	Capacitor ceramic	10 nF	-20/+80%	50V	KCK	HE70SJYF103Z
C431	Capacitor polyester	0.22 uF	±10%	63V	ERO	MKT1818 422 065
C432	Capacitor ceramic	10 nF	-20/+80%	50V	KCK	HE70SJYF103Z
C433	Capacitor ceramic	10 nF	-20/+80%	50V	KCK	HE70SJYF103Z
C434	Capacitor ceramic	10 nF	-20/+80%	50V	KCK	HE70SJYF103Z
C435	Capacitor ceramic	8.2 nF	±0.25 pF	400V	Ferroperm	9/0112.9
C436	Capacitor ceramic	10 nF	-20/+80%	50V	KCK	HE70SJYF103Z
C437	Capacitor ceramic	10 nF	-20/+80%	50V	KCK	HE70SJYF103Z
C438	Capacitor ceramic	10 nF	-20/+80%	50V	KCK	HE70SJYF103Z
C439	Capacitor ceramic	10 nF	-20/+80%	50V	KCK	HE70SJYF103Z
C440	Capacitor ceramic	10 nF	-20/+80%	50V	KCK	HE70SJYF103Z

Symbol	Description	Manufact.	
C441	Capacitor electrolytic 10 uF ±20% 35V	Roederstein	EKI00AA210F
C442	Capacitor ceramic 2.2 pF ±0.25 pF 250V	Ferroperm	9/0112.9
D401	Diode silicon	Philips	1N4448
D402	Diode silicon	Philips	1N4448
D403	Diode silicon	Philips	1N4448
D404	Diode silicon	Philips	1N4448
D405	Diode silicon	Philips	1N4448
D406	Diode silicon	Philips	1N4448
D407	Diode silicon	Philips	1N4448
D408	Diode silicon	Philips	1N4448
D409	Diode silicon	Philips	1N4448
D410	Diode switch	Telefunken	BA243
D411	Diode switch	Telefunken	BA243
D412	Diode switch	Telefunken	BA243
D413	Diode switch	Telefunken	BA243
D414	Diode switch	Telefunken	BA243
D415	Diode switch	Telefunken	BA243
D416	Diode switch	Telefunken	BA243
D417	Diode switch	Telefunken	BA243
D418	Diode switch	Telefunken	BA243
D419	Diode switch	Telefunken	BA243
D420	Diode switch	Telefunken	BA243
D421	Diode germanium	Philips	AA143
FP401	Ferrite bead 4B1	Philips	4322 020 34420
FP402	Ferrite bead 4B1	Philips	4322 020 34420
FP403	Ferrite bead 4B1	Philips	4322 020 34420
L401	Coil	S.P.	TL346
L402	Coil	S.P.	TL335
L403	Coil	S.P.	TL353
L404	Coil	S.P.	TL350
L405	Coil	S.P.	TL347
L406	Coil	S.P.	TL336
L407	Coil	S.P.	TL338
L408	Coil	S.P.	TL340
L409	Coil	S.P.	TL352
R401	Resistor 470 ohm ±5% 0.33W	Philips	2322 106 33471

b HARMONIC FILTER UNIT S1300, S1301, S1302, S1303, S1304 3/3

Symbol	Description			Manufact.	
R402	Resistor	470 ohm ±5%	0.33W	Philips	2322 106 33471
R403	Resistor	470 ohm ±5%	0.33W	Philips	2322 211 23471
R404	Resistor	470 ohm ±5%	0.33W	Philips	2322 106 33471
R405	Resistor	470 ohm ±5%	0.33W	Philips	2322 106 33471
R406	Resistor	470 ohm ±5%	0.33W	Philips	2322 211 23471
R407	Resistor	470 ohm ±5%	0.33W	Philips	2322 106 33471
R408	Resistor	470 ohm ±5%	0.33W	Philips	2322 106 33471
R409	Resistor	470 ohm ±5%	0.33W	Philips	2322 211 23471
R410	Resistor	330 kohm ±5%	0.33W	Philips	2322 106 33334
R411	Resistor	330 kohm ±5%	0.33W	Philips	2322 106 33334
R412	Resistor	10 kohm ±5%	0.33W	Philips	2322 106 33103
R413	Resistor	47 ohm ±5%	0.33W	Philips	2322 106 33479
R414	Resistor	8.2 ohm ±5%	0.33W	Philips	2322 106 33828
R415	Resistor	1.8 kohm ±5%	0.33W	Philips	2322 106 33182
R416	Resistor	390 kohm ±5%	0.33W	Philips	2322 106 33394
R417	Resistor	82 kohm ±5%	0.33W	Philips	2322 106 33823
R418	Resistor	470 kohm ±5%	0.33W	Philips	2322 211 23474
R419	Resistor	39 kohm ±5%	0.33W	Philips	2322 106 33393
R420	Resistor	47 kohm ±5%	0.33W	Philips	2322 106 33473
R421	Resistor	330 ohm ±5%	0.33W	Philips	2322 106 33331
R422	Resistor	120 ohm ±5%	0.33W	Philips	2322 106 33121
R423	Resistor	22 ohm ±5%	0.33W	Philips	2322 106 33229
R424	Resistor	1.2 kohm ±5%	0.33W	Philips	2322 106 33122
R425	Resistor	82 kohm ±5%	0.33W	Philips	2322 106 33823
R426	Resistor	100 ohm ±5%	0.33W	Philips	2322 106 33101
R427	Resistor	47 ohm ±5%	0.33W	Philips	2322 106 33479
T401	Transistor			Philips	BF494
T402	Transistor			Philips	BC548A
T403	Transistor			Philips	BF494
T404	Transistor			Philips	BF494

c	LOOP 1 MIXER S130X			MODULE 500	1/1
Symbol	*Description*			*Manufact.*	
R501	Resistor	3.3 ohm ± 5%	0.33W	Philips	2322 211 13338
R502	Resistor	3.3Kohm ± 5%	0.33W	Philips	2322 211 13332
R503	Resistor	15Kohm ± 5%	0.33W	Philips	2322 211 13153
R504	Resistor	2.2Kohm ± 5%	0.33W	Philips	2322 211 13222
R505	Resistor	270 ohm + 5%	0.33W	Philips	2322 211 13271
R506	Resistor	100 ohm ± 5%	0.33W	Philips	2322 211 13101
R507	Resistor	10 ohm ± 5%	0.33W	Philips	2322 211 13109
R508	Resistor	330 ohm ± 5%	0.33W	Philips	2322 211 13331
R509	Resistor	2.7Kohm ± 5%	0.33W	Philips	2322 211 13272
R510	Resistor	680 ohm ± 5%	0.33W	Philips	2322 211 13681
R511	Resistor	390 ohm ± 5%	0.33W	Philips	2322 211 13391
R512	Resistor	470 ohm ± 5%	0.33W	Philips	2322 211 13471
R513	Resistor	27Kohm ± 5%	0.33W	Philips	2322 211 13273
R514	Resistor	2.7Kohm ± 5%	0.33W	Philips	2322 211 13272
R515	Resistor	560 ohm ± 5%	0.33W	Philips	2322 211 13569
R516	Resistor	47 ohm ± 5%	0.33W	Philips	2322 211 13479
C501	Capacitor ceramic	10nF -20/+80%	32V	Ferroperm	9/0145.9
C502	Capacitor ceramic	10nF -20/+80%	32V	Ferroperm	9/0145.9
C503	Capacitor ceramic	10nF -20/+80%	32V	Ferroperm	9/0145.9
C504	Capacitor ceramic	10nF -20/+80%	32V	Ferroperm	9/0145.9
C505	Capacitor ceramic	10nF -20/+80%	32V	Ferroperm	9/0145.9
C506	Capacitor ceramic	10nF -20/+80%	32V	Ferroperm	9/0145.9
C507	Capacitor ceramic	47pF ± 2%	100V	Philips	2222 638 34479
C508	Capacitor polyester	100nF ± 20%	100V	Philips	2222 344 24104
C509	Capacitor ceramic	10nF -20/+80%	32V	Ferroperm	9/0145.9
C510	Capacitor ceramic	100pF ± 2%	100V	Philips	2222 638 34101
C511	Capacitor polystyrene	180pF ± 1%	500V	Philips	2222 427 41801
C512	Capacitor ceramic	33pF ± 2%	100V	Philips	2222 638 34339
C513	Capacitor ceramic	56pF ± 2%	100V	Philips	2222 638 34569
C514	Capacitor ceramic	10nF -20/+80%	32V	Ferroperm	9/0145.9
C515	Capacitor ceramic	10nF -20/+80%	32V	Ferroperm	9/0145.9
C516	Capacitor polyester	100nF ± 20%	100V	Philips	2222 344 24104
L501	Coil			S.P.	TL059
L502	Coil	12uH ± 5%		Kaschke	220/5
L503	Coil	12uH ± 5%		Kaschke	220/5
TR501	Transformer			S.P.	TL198
T501	Transistor			Philips	BF199
T502	Transistor			Philips	BF199
IC501	Integrated circuit			N.S.	LM3053

MODULE NO: 600

D VCXO AND LOOP 2 FILTER FOR S130X Module 600 1/2

Symbol	Description			Manufact.	
R601	Resistor 2,7 Kohm	±5%	0,33W	Philips	2322 211 13272
R602	Resistor 22 Kohm	±5%	0,33W	Philips	2322 211 13223
R603	Resistor 220 ohm	±5%	0,33W	Philips	2322 211 13221
R604	Resistor 2,7 Mohm	±5%	0,33W	Philips	2322 181 33275
R605	Resistor 4,7 Kohm	±5%	0,33W	Philips	2322 181 33472
R606	Resistor 220 Kohm	±5%	0,33W	Philips	2322 211 13224
R607	Resistor 18 Kohm	±5%	0,33W	Philips	2322 211 13183
R608	Resistor NTC 4,7Kohm	±5%	0,5 W	Philips	2322 635 02472
R609	Resistor 180 Kohm	±5%	0,33W	Philips	2322 181 33184
R610	Resistor 15 Kohm	±5%	0,33W	Philips	2322 211 13153
R611	Resistor 680 ohm	±5%	0,33W	Philips	2322 181 33681
R612	Resistor 180 ohm	±5%	0,33W	Philips	2322 181 33181
R613	Resistor 33 Kohm	±5%	0,33W	Philips	2322 211 13333
R614	Resistor 1,5 Kohm	±5%	0,33W	Philips	2322 211 13152
R615	Resistor 100 Kohm	±5%	0,33W	Philips	2322 211 13104
R616	Resistor 5,6 Kohm	±5%	0,33W	Philips	2322 211 13562
R617	Resistor 18 Kohm	±5%	0,33W	Philips	2322 211 13183
R618	Resistor 10 Kohm	±5%	0,33W	Philips	2322 211 13103
R619	Resistor 390 ohm	±5%	0,33W	Philips	2322 181 33391
R620	Resistor 39 Kohm	±5%	0,33W	Philips	2322 211 13393
R621	Resistor 5,6 Kohm	±5%	0,33W	Philips	2322 211 13562
R622	Resistor 560 ohm	±5%	0,33W	Philips	2322 211 13561
R623	Resistor 150 ohm	±5%	0,33W	Philips	2322 211 13151
R624	Resistor 560 ohm	±5%	0,33W	Philips	2322 211 13561
C601	Capacitor ceramic CL2	10nF-20/+80%	50VDC	NKE roperm	DT 350 758L F 103 Z
C602	Capacitor electrolytic	10uF 20%	35V	ROE	EKI00AA210F
C603	Capacitor polyester	47nF±10%	100V	Philips	2222 344 25473
C604	Capacitor ceramic	33pF ±2%	100V	Philips	2222 638 34339
C605	Capacitor polyester	680nF ±10%	100V	Philips	2222 344 25684
C606	Capacitor polyester	47nF ±10%	100V	Philips	2222 344 25473
C607	Capacitor polyester	470nF ±10%	100V	Philips	2222 344 25474
C608	Capacitor polyester	47nF ±20%	100V	Philips	2222 344 24473
C609	Capacitor ceramic	56pF ± 2%	100V	Philips	2222 642 34569
C610	Capacitor polyester	51pF ± 1%	500V	Philips	2222 427 45109
C611	Capacitor ceramic	5,8p2 NPO .5	400V	FERROPERM	9/0112,9
C612	Capacitor ceramic CL2	10nF-20/+80%	50VDC	NKE	DT 350 758L F 103 Z
C613	Capacitor electrolytic	10uF 20%	35V	ROE	EKI00AA210F

c VCXO AND LOOP 2 FILTER S130X Module 600 2/2

Symbol	Description	Manufact.	
C614	Capacitor polyester 47nF ±20% 100V	Philips	2222 344 24473
C615	Capacitor electrolytic 10uF 20% 35V	ROE	EKI00AA210F
C616	Capacitor polystyrene 220pF ±5% 500V	Philips	2222 427 22201
L601	Coil	S.P.	TL 257
T601	Transistor	Philips	BF256B
T602	Transistor	Philips	BF199
T603	Transistor	Philips	BC558
D601	Diode varicap.	Motorola	MV109
D602	Diode varicap.	Motorola	MV109
IC601	Integrated circuit	N.S.	LM 308N
X601	Crystal f=10097.600 kHz	S.P.	C 1010

A VCO Selector S1302/S1303/S1304 Module 700 1/4

Symbol	Description			Manufact.	
R701	Resistor	10 kohm ±5%	0,33W	PHILIPS	2322 211 13103
R702	Resistor	10 kohm ±5%	0,33W	PHILIPS	2322 211 13103
R703	Resistor	10 kohm ±5%	0,33W	PHILIPS	2322 211 13103
R704	Resistor	10 kohm ±5%	0,33W	PHILIPS	2322 211 13103
R705	Resistor	10 kohm ±5%	0,33W	PHILIPS	2322 211 13103
R706	Resistor	18 kohm ±5%	0,33W	PHILIPS	2322 211 13183
R707	Resistor	10 kohm ±5%	0,33W	PHILIPS	2322 106 33103
R708	Resistor	820 ohm ±5%	0,33W	PHILIPS	2322 106 33821
R709	Resistor	12 kohm ±5%	0,33W	PHILIPS	2322 106 33123
R710	Resistor	12 kohm ±5%	0,33W	PHILIPS	2322 106 33123
R711	Resistor	12 kohm ±5%	0,33W	PHILIPS	2322 106 33123
R712	Resistor	12 kohm ±5%	0,33W	PHILIPS	2322 106 33123
R713	Resistor	12 kohm ±5%	0,33W	PHILIPS	2322 106 33123
R714	Resistor	12 kohm ±5%	0,33W	PHILIPS	2322 181 33123
R715	Resistor	12 kohm ±5%	0,33W	PHILIPS	2322 181 33123
R716	Resistor	12 kohm ±5%	0,33W	PHILIPS	2322 181 33123
R717	Resistor	12 kohm ±5%	0,33W	PHILIPS	2322 181 33123
R718	Resistor	12 kohm ±5%	0,33W	PHILIPS	2322 181 33123
R719	Resistor	12 kohm ±5%	0,33W	PHILIPS	2322 181 33123
R720	Resistor	12 kohm ±5%	0,33W	PHILIPS	2322 181 33123
R721	Resistor	12 kohm ±5%	0,33W	PHILIPS	2322 181 33123
R722	Resistor	12 kohm ±5%	0,33W	PHILIPS	2322 181 33123
R723	Resistor	12 kohm ±5%	0,33W	PHILIPS	2322 181 33123
R724	Resistor	12 kohm ±5%	0,33W	PHILIPS	2322 181 33123
R725	Resistor	12 kohm ±5%	0,33W	PHILIPS	2322 181 33123
R726	Resistor	12 kohm ±5%	0,33W	PHILIPS	2322 181 33123
R727	Resistor	12 kohm ±5%	0,33W	PHILIPS	2322 181 33123
R728	Resistor	12 kohm ±5%	0,33W	PHILIPS	2322 181 33123
R729	Resistor	12 kohm ±5%	0,33W	PHILIPS	2322 181 33123
R730	Resistor	12 kohm ±5%	0,33W	PHILIPS	2322 181 33123
R731	Resistor	12 kohm ±5%	0,33W	PHILIPS	2322 181 33123
R732	Resistor	12 kohm ±5%	0,33W	PHILIPS	2322 181 33123
R733	Resistor	10 kohm ±5%	0,33W	PHILIPS	2322 106 33103
R734	Resistor	10 kohm ±5%	0,33W	PHILIPS	2322 106 33103
R735	Resistor	10 kohm ±5%	0,33W	PHILIPS	2322 106 33103
R736	Resistor	10 kohm ±5%	0,33W	PHILIPS	2322 106 33103
R737	Resistor	3,9 kohm ±5%	0,33W	PHILIPS	2322 211 13392
R738	Resistor	33 kohm ±5%	0,33W	PHILIPS	2322 106 33333
R739	Resistor	100 kohm ±5%	0,33W	PHILIPS	2322 106 33104
R740	Resistor	100 kohm ±5%	0,33W	PHILIPS	2322 106 33104
R741	Resistor	100 kohm ±5%	0,33W	PHILIPS	2322 211 13104

A VCO Selector S1302/S1303/S1304 Module 700 2/4

Symbol	Description			Manufact.	
R742	Resistor	100 kohm ±5%	0,33W	PHILIPS	2322 211 13104
R743	Resistor	1 kohm ±5%	0,33W	PHILIPS	2322 106 33102
R744	Resistor	5,6 kohm ±5%	0,33W	PHILIPS	2322 106 33562
R745	Resistor	33 kohm ±5%	0,33W	PHILIPS	2322 106 33333
R746	Resistor	33 kohm ±5%	0,33W	PHILIPS	2322 106 33333
R747	Resistor	12 kohm ±5%	0,33W	PHILIPS	2322 181 33123
R748	Resistor	12 kohm ±5%	0,33W	PHILIPS	2322 181 33123
R749	Resistor	12 kohm ±5%	0,33W	PHILIPS	2322 181 33123
R750	Resistor	12 kohm ±5%	0,33W	PHILIPS	2322 181 33123
R751	Resistor	12 kohm ±5%	0,33W	PHILIPS	2322 181 33123
R752	Resistor	12 kohm ±5%	0,33W	PHILIPS	2322 181 33123
R753	Resistor	12 kohm ±5%	0,33W	PHILIPS	2322 181 33123
R754	Resistor	12 kohm ±5%	0,33W	PHILIPS	2322 181 33123
R755	Resistor	12 kohm ±5%	0,33W	PHILIPS	2322 181 33123
R756	Resistor	12 kohm ±5%	0,33W	PHILIPS	2322 181 33123
R757	Resistor	12 kohm ±5%	0,33W	PHILIPS	2322 181 33123
R758	Resistor	12 kohm ±5%	0,33W	PHILIPS	2322 181 33123
R759	Resistor	12 kohm ±5%	0,33W	PHILIPS	2322 181 33123
R760	Resistor	12 kohm ±5%	0,33W	PHILIPS	2322 181 33123
R761	Resistor	12 kohm ±5%	0,33W	PHILIPS	2322 181 33123
R762	Resistor	12 kohm ±5%	0,33W	PHILIPS	2322 181 33123
R763	Resistor	12 kohm ±5%	0,33W	PHILIPS	2322 181 33123
R764	Resistor	12 kohm ±5%	0,33W	PHILIPS	2322 181 33123
R765	Resistor	12 kohm ±5%	0,33W	PHILIPS	2322 106 33123
R766	Resistor	12 kohm ±5%	0,33W	PHILIPS	2322 106 33123
R767	Resistor	12 kohm ±5%	0,33W	PHILIPS	2322 106 33123
R768	Resistor	12 kohm ±5%	0,33W	PHILIPS	2322 106 33123
R769	Resistor	12 kohm ±5%	0,33W	PHILIPS	2322 106 33123
R770	Resistor	12 kohm ±5%	0,33W	PHILIPS	2322 106 33123
R771	Resistor	12 kohm ±5%	0,33W	PHILIPS	2322 106 33123
R772	Resistor	12 kohm ±5%	0,33W	PHILIPS	2322 106 33123
R773	Resistor	12 kohm ±5%	0,33W	PHILIPS	2322 106 33123
R774	Resistor	12 kohm ±5%	0,33W	PHILIPS	2322 106 33123
R775	Resistor	12 kohm ±5%	0,33W	PHILIPS	2322 106 33123
R776	Resistor	12 kohm ±5%	0,33W	PHILIPS	2322 106 33123
R777	Resistor	12 kohm ±5%	0,33W	PHILIPS	2322 181 33123
R778	Resistor	12 kohm ±5%	0,33W	PHILIPS	2322 181 33123
R779	Resistor	12 kohm ±5%	0,33W	PHILIPS	2322 181 33123
R780	Resistor	12 kohm ±5%	0,33W	PHILIPS	2322 181 33123
R781	Resistor	12 kohm ±5%	0,33W	PHILIPS	2322 181 33123
R782	Resistor	12 kohm ±5%	0,33W	PHILIPS	2322 181 33123

A VCO Selector S1302/S1303/S1304 Module 700 3/4

Symbol	Description		Manufact.	
R783	Resistor 12 kohm ±5%	0,33W	PHILIPS	2322 181 33123
R784	Resistor 12 kohm ±5%	0,33W	PHILIPS	2322 181 33123
R785	Resistor 12 kohm ±5%	0,33W	PHILIPS	2322 181 33123
R786	Resistor 12 kohm ±5%	0,33W	PHILIPS	2322 106 33123
R787	Resistor 12 kohm ±5%	0,33W	PHILIPS	2322 106 33123
R788	Resistor 12 kohm ±5%	0,33W	PHILIPS	2322 106 33123
R789	Resistor 12 kohm ±5%	0,33W	PHILIPS	2322 106 33123
R790	Resistor 12 kohm ±5%	0,33W	PHILIPS	2322 106 33123
R791	Resistor 12 kohm ±5%	0,33W	PHILIPS	2322 106 33123
RA701	Resistor ARRAY8X10 kohm ±5%	0,125W	ITT	VR8 10 kohm ±5%
C701	Capacitor Polyetylehne 0,1uF±10%	100V	SIEMENS	B32510-D1104-K
C702	Capacitor Polyetylehne 0,1uF±10%	100V	SIEMENS	B32510-D1104-K
C703	Capacitor Polyetylehne 0,1uF±10%	100V	SIEMENS	B32510-D1104-K
C704	Capacitor Polyetylehne 0,1uF±10%	100V	SIEMENS	B32510-D1104-K
C705	Capacitor Polyetylehne 0,1uF±10%	100V	SIEMENS	B32510-D1104-K
C706	Capacitor Ceramic 10nF -20/+80%	50V	KCK	HE705JYF103Z
C707	Capacitor Ceramic 10nF -20/+80%	50V	KCK	HE70SJYF103Z
C708	Capacitor Ceramic 10nF -20/+80%	50V	KCK	HE70SJYF103Z
C709	Capacitor Ceramic 10nF -20/+80%	50V	KCK	HE70SJYF103Z
C710	Capacitor Ceramic 10nF -20/+80%	50V	KCK	HE70SJYF103Z
C711	Capacitor Electrolyt 10uF ±20%	35V	ERO	EKI 00AA 210F
C712	Capacitor Ceramic 10nF -20/+80%	50V	KCK	HE70SJYF103Z
C713	Capacitor Electrolyt 10uF ±20%	35V	ERO	EKI 00AA 210F
C714	Capacitor Electrolyt 10uF ±20%	35V	ERO	EKI 00AA 210F
C715	Capacitor Ceramic 10nF -20/+80%	50V	KCK	HE70SJYF103Z
D701	Diode Germanium		ITT	AA143
D702	Diode Germanium		ITT	AA143
D703	Diode Germanium		ITT	AA143
D704	Diode Germanium		ITT	AA143
D705	Diode Germanium		ITT	AA143
D706	Diode Silicon		PHILIPS	IN4148
D707	Diode Silicon		PHILIPS	IN4148
D708	Diode Silicon		PHILIPS	IN4148
D709	Diode Silicon		PHILIPS	IN4148
D710	Diode Silicon		PHILIPS	IN4148
D711	Diode Silicon		PHILIPS	IN4148
D712	Diode Silicon		PHILIPS	IN4148
D713	Diode Silicon		PHILIPS	IN4148

MODULE NO: 700

VCO Selector S1302/S1303/S1304 Module 700 4/4

Symbol	Description	Manufact.	
D714	Diode Silicon	PHILIPS	IN4148
T701	Transistor	PHILIPS	BC548B
T702	Transistor	PHILIPS	BC639
T703	Transistor	PHILIPS	BC548B
T704	Transistor	PHILIPS	BC548B
T705	Transistor	PHILIPS	BC558B
T706	Transistor	PHILIPS	BC328-25
T707	Transistor	PHILIPS	BC328-25
T708	Transistor	PHILIPS	BC328-25
T709	Transistor	PHILIPS	BC328-25
T710	Transistor	PHILIPS	BC328-25
T711	Transistor	PHILIPS	BC328-25
T712	Transistor	PHILIPS	BC328-25
T713	Transistor	PHILIPS	BC328-25
T714	Transistor	PHILIPS	BC328-25
T715	Transistor	PHILIPS	BC328-25
T716	Transistor	PHILIPS	BC328-25
T717	Transistor	PHILIPS	BC328-25
T718	Transistor	PHILIPS	BC328-25
T719	Transistor	PHILIPS	BC328-25
T720	Transistor	PHILIPS	BC328-25
T721	Transistor	PHILIPS	BC328-25
T722	Transistor	PHILIPS	BC328-25
T723	Transistor	PHILIPS	BC328-25
T724	Transistor	PHILIPS	BC328-25
T725	Transistor	PHILIPS	BC328-25
T726	Transistor	PHILIPS	BC328-25
T727	Transistor	PHILIPS	BC328-25
IC701	Integrated Circuit	TEXAS	SN7407
IC702	Integrated Circuit	MMI	6330-1
IC703	Integrated Circuit	MOTOROLA	MC14515BCP
IC704	Integrated circuit	TEXAS	SN74LS138N
IC705	Integrated circuit	TEXAS	SN7407

INPUT FILTER S1302/S1303/S1304 Module 900 1/2

Symbol	Description	Manufact.	
R901	Trim. Potmeter 1 kohm Cermet	PHILIPS	2322 482 20102
R902	Resistor 2,7 kohm ±5% 0,33W	PHILIPS	2322 211 13272
R903	Resistor 220 ohm ±5% 1,15W	PHILIPS	2322 214 13221
R904	Resistor 220 ohm ±5% 0,33W	PHILIPS	2322 211 13221
C901	Capacitor Polyester 100nF ±20% 100V	PHILIPS	2322 344 24104
C902	Capacitor Polyester 100nF ±20% 100V	PHILIPS	2322 344 24104
C903	Capacitor Polyester 100nF ±20% 100V	PHILIPS	2322 244 24104
C904	Capacitor Electrolyt 10uF ±20% 35V	ERO	EKI 00AA 21OF
C905	Capacitor Polyester 100nF ±20% 100V	PHILIPS	2322 344 24104
C906	Capacitor Polyester 100nF ±20% 100V	PHILIPS	2322 344 24104
C907	Capacitor Polyester 100nF ±20% 100V	PHILIPS	2322 344 24104
C908	Capacitor Polyester 100nF ±20% 100V	PHILIPS	2322 344 24104
C909	Capacitor Polycarbonat 1nF ±20% 630V	ERO	KC1849 21016
C910	Capacitor Polyester 100nF ±20% 100V	PHILIPS	2222 344 24104
C911	Capacitor Polyester 100nF ±20% 100V	PHILIPS	2222 344 24104
C912	Capacitor Polyester 100nF ±20% 100V	PHILIPS	2222 344 24104
C913	Capacitor Polycarbonat 1nF ±20% 630V	ERO	KC1849 21016
C914	Capacitor Polyester 100nF ±20% 100V	PHILIPS	2222 344 24104
C915	Capacitor Polyester 10nF ±20% 400V	PHILIPS	2222 344 54103
C916	Capacitor Polyester 10nF ±20% 400V	PHILIPS	2222 344 54103
C917	Capacitor Polyester 100nF ±20% 100V	PHILIPS	2222 344 24104
C918	Capacitor Polyester 100nF ±20% 100V	PHILIPS	2222 344 24104
C919	Capacitor Polyester 100nF ±20% 100V	PHILIPS	2222 344 24104
C920	Capacitor Polyester 100nF ±20% 100V	PHILIPS	2222 344 24104
C921	Capacitor Polyester 100nF ±20% 100V	PHILIPS	2222 344 24104
C922	Capacitor Polyester 100nF ±20% 100V	PHILIPS	2222 344 24104
C923	Capacitor Polyester 100nF ±20% 100V	PHILIPS	2222 344 24104
C924	Capacitor Polyester 100nF ±20% 100V	PHILIPS	2222 344 24104
C925	Capacitor Polyester 100nF ±20% 100V	PHILIPS	2222 344 24104
C926	Capacitor Polyester 100nF ±20% 100V	PHILIPS	2222 344 24104
C927	Capacitor Polycarbonat 1nF ±20% 630V	ERO	KC1849 21016
C928	Capacitor Polyester 100nF ±20% 100V	PHILIPS	2222 344 24104
C929	Capacitor Polycarbonat 1nF ±20% 630V	ERO	KC1849 21016
C930	Capacitor Polyester 100nF ±20% 100V	PHILIPS	2222 344 24104
C931	Capacitor Polycarbonat 1nF ±20% 630V	ERO	KC1849 21016
C932	Capacitor Polyester 100nF ±20% 100V	PHILIPS	2222 344 24104
C933	Capacitor Polyester 10nF ±20% 400V	PHILIPS	2222 344 54103
C934	Capacitor Electrolyt 10nF ±20% 35V	ERO	EKI 00AA 21OF
C935	Capacitor Electrolyt 47uF -10/+50% 63V	ERO	B41283-C8476-T

MODULE NO: 900

INPUT FILTER S/1302/S1303/S1304 Module 900 2/2

Symbol	*Description*	*Manufact.*	
C936	Capacitor Polyester 100nF ±20% 100V	PHILIPS	2222 344 24104
C937	Capacitor Polyester 100nF ±20% 100V	PHILIPS	2222 344 24104
D901	Diode Silkon	PHILIPS	BAV21
	Not In S1302		

B MODE SWITCH S1303/S1304 Module 1000 1/4

Symbol	Description			Manufact.	
R1001	Resistor	10 kohm ±5%	0,33W	PHILIPS	2322 211 13103
R1002	Resistor	22 kohm ±5%	0,33W	PHILIPS	2322 211 13223
R1003	Resistor	330 ohm ±5%	1,15W	PHILIPS	2322 214 13331
R1004	Resistor	18 kohm ±5%	0,33W	PHILIPS	2322 211 13183
R1005	Resistor	10 kohm ±5%	0,33W	PHILIPS	2322 211 13103
R1006	Resistor	6,8 kohm ±5%	0,33W	PHILIPS	2322 211 13682
R1007	Resistor	3,9 kohm ±5%	0,33W	PHILIPS	2322 211 13392
R1008	Resistor	3,9 kohm ±5%	0,33W	PHILIPS	2322 211 13392
R1009	Resistor	10 kohm ±5%	0,33W	PHILIPS	2322 211 13103
R1010	Resistor	5,6 kohm ±5%	0,33W	PHILIPS	2322 211 13562
R1011	Resistor	68 kohm ±5%	0,33W	PHILIPS	2322 211 13683
R1012	Resistor	15 ohm ±5%	0,33W	PHILIPS	2322 211 13150
R1013	Resistor	68 ohm ±5%	0,33W	PHILIPS	2322 211 13680
R1014	Resistor	18 kohm ±5%	0,33W	PHILIPS	2322 211 13183
R1015	Resistor	4,7 kohm ±5%	0,33W	PHILIPS	2322 211 13472
R1016	Resistor	10 kohm ±5%	0,33W	PHILIPS	2322 211 13103
R1017	Resistor	15 kohm ±5%	0,33W	PHILIPS	2322 211 13153
R1018	Resistor	10 kohm ±5%	0,33W	PHILIPS	2322 211 13103
R1019	Resistor	15 kohm ±5%	0,33W	PHILIPS	2322 211 13153
R1020	Resistor	18 kohm ±5%	0,33W	PHILIPS	2322 211 13183
R1021	Resistor	3,3 kohm ±5%	0,33W	PHILIPS	2322 211 13332
R1022	Resistor	270 ohm ±5%	0,33W	PHILIPS	2322 211 13271
R1023	Resistor	820 ohm ±5%	0,33W	PHILIPS	2322 211 13821
R1024	Resistor	0,2 kohm ±5%	0,33W	PHILIPS	2322 211 13222
R1025	Resistor	680 ohm ±5%	0,33W	PHILIPS	2322 181 53681
R1026	Resistor	22 kohm ±5%	0,33W	PHILIPS	2322 211 13223
R1027	Resistor	15 kohm ±5%	0,33W	PHILIPS	2322 211 13153
R1028	Resistor	22 kohm ±5%	0,33W	PHILIPS	2322 211 13223
R1029	Resistor	18 kohm ±5%	0,33W	PHILIPS	2322 211 13183
R1030	Resistor	10 kohm ±5%	0,33W	PHILIPS	2322 211 13103
R1031	Resistor	3,9 kohm ±5%	0,33W	PHILIPS	2322 211 13392
R1032	Resistor	18 kohm ±5%	0,33W	PHILIPS	2322 211 13183
R1033	Resistor	8,2 kohm ±5%	0,33W	PHILIPS	2322 211 13822
R1034	Resistor	22 kohm ±5%	0,33W	PHILIPS	2322 211 13223
R1035	Resistor	22 kohm ±5%	0,33W	PHILIPS	2322 211 13223
R1036	Resistor	22 kohm ±5%	0,33W	PHILIPS	2322 211 13223
R1037	Resistor	100 kohm ±5%	0,33W	PHILIPS	2322 211 13104
R1038	Resistor	4,7 kohm ±5%	0,33W	PHILIPS	2322 211 13472
R1039	Resistor	8,2 kohm ±5%	0,33W	PHILIPS	2322 211 13822
R1040	Resistor	22 kohm ±5%	0,33W	PHILIPS	2322 211 13223
R1041	Resistor	47 kohm ±5%	0,33W	PHILIPS	2322 211 13473

A MODE SWITCH S1303/S1304 Module 1000 2/4

Symbol	Description	Manufact.	
R1042	Resistor 22 kohm ±5% 0,33W	PHILIPS	2322 211 13103
R1043	Resistor 10 kohm ±5% 0,33W	PHILIPS	2322 211 13103
R1044	Resistor 10 kohm ±5% 0,33W	PHILIPS	2322 211 13103
R1045	Resistor 3,3 kohm ±5% 0,33W	PHILIPS	2322 211 13332
R1046	Resistor 22 kohm ±5% 0,33W	PHILIPS	2322 211 13223
R1047	Resistor 3,3 kohm ±5% 0,33W	PHILIPS	2322 211 13332
R1048	Resistor 270 ohm ±5% 0,33W	PHILIPS	2322 211 13271
R1049	Resistor 22 kohm ±5% 0,33W	PHILIPS	2322 211 13223
R1050	Resistor 270 ohm ±5% 0,33W	PHILIPS	2322 211 13271
R1051	Resistor 10 kohm ±5% 0,33W	PHILIPS	2322 211 13103
R1052	Resistor 820 ohm ±5% 0,33W	PHILIPS	2322 211 13821
R1053	Resistor 82,5 kohm ±5% 0,33W	PHILIPS	2322 211 58253
R1054	Resistor 680 kohm ±5% 0,33W	PHILIPS	2322 211 33684
R1055	Resistor 15 ohm ±5% 0,33W	PHILIPS	2322 211 13150
R1056	Resistor 15 ohm ±5% 0,33W	PHILIPS	2322 211 13150
R1057	Resistor 39,2 kohm ±5% 0,33W	PHILIPS	2322 211 53923
R1058	Resistor 1,5 kohm ±5% 0,33W	PHILIPS	2322 211 13152
R1059	Resistor 39,2 kohm ±5% 0,33W	PHILIPS	2322 211 53923
R1060	Resistor 10 kohm ±5% 0,33W	PHILIPS	2322 211 13103
R1061	Resistor 47 kohm ±5% 0,33W	PHILIPS	2322 211 13473
C1001	Not used		
C1002	Capacitor Ceramic 10nF -20/+80% 50V	KCK	HE705SYF103Z
C1003	Capacitor Polyester ±20% 400V	PHILIPS	2322 344 54103
C1004	Capacitor Ceramic 10nF -20/+80% 50V	KCK	HE70SJYF103Z
C1005	Capacitor Polyetylen 0,22uF ±10% 100V	SIEMENS	B32511-D1224-D
C1006	Capacitor Polyester 100nF ±10% 100V	PHILIPS	2322 344 25104
C1007	Capacitor Polyetylen 0,22uF ±10% 100V	SIEMENS	B32511-D1224-D
C1008	Capacitor Ceramic 10nF -20/+80% 50V	KCK	HE70SYF103Z
C1009	Capacitor Electrolyt 470uF -10/+50% 25V	ERO	EB00GD347E
C1010	Capacitor Ceramic 10nF -20/+80% 50V	KCK	HE70SJYF103Z
C1011	Capacitor Electrolyt 4,7uF ±20% 50V	ERO	EKI00AA147H
C1012	Capacitor Ceramic 10nF -20/+80% 50V	KCK	HE70SJYF103Z
C1013	Capacitor Ceramic 10nF -20/+80% 50V	KCK	HE70SJYF103Z
C1014	Capacitor Ceramic 10nF -20/+80% 50V	KCK	HE70SJYF103Z
C1015	Capacitor Ceramic 10nF -20/+80% 50V	KCK	HE70SJYF103Z
C1016	Capacitor Ceramic 10nF -20/+80% 50V	KCK	HE70SJYF103Z
C1017	Capacitor Ceramic 10nF -20/+80% 50V	KCK	HE70SJYF103Z
C1018	Capacitor Electrolyt 4,7uF ±20% 50V	ERO	EKI00AA147H
C1019	Capacitor Ceramic 10nF -20/+80% 50V	KCK	HE70SJYF103Z
C1020	Capacitor Ceramic 10nF -20/+80% 50V	KCK	HE70SJYF103Z

MODE SWITCH S1303/S1304 Module 1000

Symbol	Description	Manufact.	
C1021	Capacitor Ceramic 10nF -20/+80% 50V	KCK	HE70SJYF103Z
C1022	Capacitor Ceramic 10nF -20/+80% 50V	KCK	HE70SJYF103Z
C1023	Capacitor Ceramic 10nF -20/+80% 50V	KCK	HE70SJYF103Z
C1024	Capacitor Electrolyt 10nF -20/+50% 25V	ERO	ETP 3F
D1001	Diode Silicon	PHILIPS	BAV21
D1002	Diode Silicon	PHILIPS	BAV21
D1003	Diode Silicon	PHILIPS	BAV21
D1004	Diode Silicon	PHILIPS	BAV21
D1005	Diode Silicon	PHILIPS	BAV21
D1006	Diode Silicon	PHILIPS	BAV21
D1007	Diode Silicon	PHILIPS	BAV21
D1008	Diode Silicon	PHILIPS	BAV21
D1009	Diode Silicon	PHILIPS	BAV21
D1010	Diode Silicon	PHILIPS	BAV21
D1011	Diode Silicon	PHILIPS	BAV21
D1012	Diode Silicon	PHILIPS	BAV21
D1013	Diode Silicon	PHILIPS	BAV21
D1014	Diode Silicon	PHILIPS	BAV21
D1015	Diode Silicon	PHILIPS	BAV21
D1016	Diode Silicon	PHILIPS	BAV21
D1017	Diode Silicon	PHILIPS	BAV21
D1018	Diode Silicon	PHILIPS	BAV21
D1019	Diode Silicon	PHILIPS	BAV21
D1020	Diode Silicon	PHILIPS	BAV21
D1021	Diode Silicon	PHILIPS	BAV21
D1022	Diode Silicon	PHILIPS	BAV21
D1023	Diode Silicon	PHILIPS	BAV21
D1025	Diode Silicon	PHILIPS	BAV21
D1026	Diode Silicon	PHILIPS	BAV21
D1027	Diode Silicon	PHILIPS	BAV21
D1028	Diode Silicon	PHILIPS	BAV21
D1029	Diode Silicon	PHILIPS	BAV21
D1030	Diode Silicon	PHILIPS	BAV21
D1031	Diode Silicon	PHILIPS	BAV21
D1032	Diode Silicon	PHILIPS	BAV21
D1033	Diode Zener 12V 0,4W	PHILIPS	BZX79C12
D1034	Diode Silicon	PHILIPS	BAV21
D1035	Diode Silicon	PHILIPS	BAV21
D1036	Diode Silicon	PHILIPS	BAV21
D1037	Diode Silicon	PHILIPS	BAV21

MODE SWITCH S1303/S1304 Module 1000

Symbol	*Description*	*Manufact.*	
D1038	Diode Germanium	ITT	AA143
D1039	Diode Silicon	PHILIPS	BAV21
T1001	Transistor	PHILIPS	BC639
T1002	Transistor	PHILIPS	BC558B
T1003	Transistor	PHILIPS	BC558B
T1004	Transistor	PHILIPS	BC558B
T1005	Transistor	PHILIPS	BC558B
T1006	Transistor	PHILIPS	BC558B
T1007	Transistor	PHILIPS	BC640
T1008	Transistor	PHILIPS	BC558B
T1009	Transistor	PHILIPS	BC558B
T1010	Transistor	PHILIPS	BC548B
T1011	Transistor	PHILIPS	BC548B
T1012	Transistor	PHILIPS	BC548B
T1013	Transistor	PHILIPS	BC548B
T1014	Transistor	PHILIPS	BC640
T1015	Transistor	PHILIPS	BC548B
T1016	Transistor	PHILIPS	BC640
T1017	Transistor	PHILIPS	BC548B
RE1001	Relay 24V	NATIONAL	NF2-24V
RE1002	Relay 24V	NATIONAL	NF4-24V
RE1003	Relay 24V	NATIONAL	NF4-24V
RE1004	Relay 24V	NATIONAL	NF4-24V
S1001	Switch 9x17,5 2U Tast 3,4,5 = 6U -GR	SHADOW	
IC1001	Integrated Circuit	NATIONAL	LM358

a	SSB GENERATOR S130X		MODULE 1100	1/4
Symbol	*Description*		*Manufact.*	
R1101	Resistor	6K8 ohm ±5% 0.33W	Philips	2322 211 13682
R1102	Resistor	1KO ohm ±5% 0.33W	Philips	2322 211 13102
R1103	Resistor	220 ohm ±5% 0.33W	Philips	2322 211 13221
R1104	Resistor	1KO ohm ±5% 0.33W	Philips	2322 211 13102
R1105	Resistor	1KO ohm ±5% 0.33W	Philips	2322 211 13102
R1106	Resistor	1KO ohm ±5% 0.33W	Philips	2322 211 13102
R1107	Resistor	1KO ohm ±5% 0.33W	Philips	2322 211 13102
R1108	Resistor	6K8 ohm ±5% 0.33W	Philips	2322 211 13682
R1109	Potentiometer	22K ohm cermet	Philips	2322 482 20223
R1110	Resistor	5K6 ohm ±5% 0.33W	Philips	2322 211 13562
R1111	Resistor	12K ohm ±5% 0.33W	Philips	2322 211 13123
R1112	Resistor	2K2 ohm ±5% 0.33W	Philips	2322 211 13222
R1113	Resistor	2K2 ohm ±5% 0.33W	Philips	2322 211 13222
R1114	Resistor	2K2 ohm ±5% 0.33W	Philips	2322 211 13222
R1115	Resistor	2K2 ohm ±5% 0.33W	Philips	2322 211 13222
R1116	Resistor	68 ohm ±5% 0.33W	Philips	2322 211 13689
R1117	Resistor	150 ohm ±5% 0.33W	Philips	2322 211 13151
R1118	Resistor	15K ohm ±5% 0.33W	Philips	2322 211 13153
R1119	Resistor	47K ohm ±5% 0.33W	Philips	2322 211 13473
R1120	Resistor	47K ohm ±5% 0.33W	Philips	2322 211 13473
R1121	Resistor	47 ohm ±5% 0.33W	Philips	2322 211 13479
R1122	Resistor	47 ohm ±5% 0.33W	Philips	2322 211 13479
R1123	Resistor	390 ohm ±5% 0.33W	Philips	2322 211 13391
R1124	Resistor	47K ohm ±5% 0.33W	Philips	2322 211 13473
R1125	Potentiometer	100 ohm cermet	Philips	2322 482 20101
R1126	Resistor	330 ohm ±5% 0.33W	Philips	2322 211 13331
R1127	Resistor	330 ohm ±5% 0.33W	Philips	2322 211 13331
R1128	Resistor	470 ohm ±5% 0.33W	Philips	2322 211 13471
R1129	Resistor	47K ohm ±5% 0.33W	Philips	2322 211 13473
R1130	Resistor	150 ohm ±5% 0.33W	Philips	2322 211 13151
R1131	Resistor	2K2 ohm ±5% 0.33W	Philips	2322 211 13222
R1132	Resistor	18K ohm ±5% 0.33W	Philips	2322 211 13183
R1133	Resistor	56K ohm ±5% 0.33W	Philips	2322 211 13563
R1134	Resistor	100 ohm ±5% 0.33W	Philips	2322 211 13101
R1135	Resistor	1KO ohm ±5% 0,33W	Philips	2322 211 13102
R1136	Resistor	1KO ohm ±5% 0.33W	Philips	2322 211 13102
R1137	Resistor	22K ohm ±5% 0.33W	Philips	2322 211 13223
R1138	Resistor	68K ohm ±5% 0.33W	Philips	2322 211 13683
R1139	Resistor	1K5 ohm ±5% 0.33W	Philips	2322 211 13152
R1140	Resistor NTC	1KO ohm ±5% 0.5W	Philips	2322 642 12102

MODULE NO: 1100

Symbol	Description	Manufact.	
R1141	Resistor 1K0 ohm ±5% 0.33W	Philips	2322 211 13102
R1142	Resistor 150 ohm ±5% 0.33W	Philips	2322 211 13151
R1143	Resistor 330 ohm ±5% 0.33W	Philips	2322 211 13331
R1144	Resistor 2K7 ohm ±5% 0.33W	Philips	2322 211 13272
R1145	Resistor 1K8 ohm ±5% 0.33W	Philips	2322 211 13182
R1146	Resistor 2K2 ohm ±5% 0.33W	Philips	2322 211 13222
R1147	Resistor 1K5 ohm ±5% 0.33W	Philips	2322 211 13152
R1148	Resistor 15K ohm ±5% 0.33W	Philips	2322 211 13153
R1149	Potentiometer 100 ohm cermet	Philips	2322 482 20101
R1150	Resistor 47 ohm ±5% 0.33W	Philips	2322 211 13479
R1151	Resistor 220 ohm ±5% 0.33W	Philips	2322 211 13221
R1152	Resistor 270 ohm ±5% 0.33W	Philips	2322 211 13271
R1153	Resistor 26K7 ohm ±1% 0.4W	Philips	2322 151 52673
R1154	Resistor 26K7 ohm ±1% 0.4W	Philips	2322 151 52673
R1155	Resistor 8K2 ohm ±5% 0.33W	Philips	2322 211 13822
R1156	Resistor 1K8 ohm ±5% 0.33W	Philips	2322 211 13182
R1157	Resistor 560 ohm ±5% 0.33W	Philips	2322 211 13561
R1158	Potentiometer 470 ohm cermet	Philips	2322 482 20471
R1159	Resistor 560 ohm ±5% 0.33W	Philips	2322 211 13561
R1160	Resistor 120 ohm ±5% 0.33W	Philips	2322 211 13121
R1161	Resistor 150 ohm ±5% 0.33W	Philips	2322 211 13151
R1162	Resistor 150 ohm ±5% 0.33W	Philips	2322 211 13151
R1163	Resistor 150 ohm ±5% 0.33W	Philips	2322 211 13151
C1101	Capacitor Electrolyt 4u7F ±20% 50V	ROE	EKI00AA147H
C1102	Capacitor polyester 100nF ±20% 100V	Philips	2222 344 24104
C1103	Capacitor polyester 100nF ±20% 100V	Philips	2222 344 24104
C1104	Capacitor polyester 100nF ±20% 100V	Philips	2222 344 24104
C1105	Capacitor polyester 100nF ±20% 100V	Philips	2222 344 24104
C1106	Capacitor polyester 100nF ±20% 100V	Philips	2222 344 24104
C1107	Capacitor polyester 100nF ±20% 100V	Philips	2222 344 24104
C1108	Capacitor polystyrene 1n2F ± 5% 125V	Philips	2222 425 21202
C1109	Capacitor polystyrene 4n7F ± 5% 63V	Philips	2222 424 24702
C1110	Capacitor polyester 100nF ±20% 100V	Philips	2222 344 24104
C1111	Capacitor polyester 100nF ±20% 100V	Philips	2222 344 24104
C1112	Capacitor polyester 100nF ±20% 100V	Philips	2222 344 24104
C1113	Capacitor polyester 100nF ±20% 100V	Philips	2222 344 24104
C1114	Capacitor polystyrene 1n0F ± 5% 125V	Philips	2222 425 21002
C1115	Capacitor polyester 100nF ±2P% 100V	Philips	2222 344 24104
C1116	Capacitor electrolyt 100uF-10/+50% 25V	ROE	EKM00CC310E

Symbol	Description			Manufact.	
C1117	Capacitor polyester	100nF ±20%	100V	Philips	2222 344 24104
C1118	Capacitor polyester	10nF ±20%	250V	Philips	2222 344 40103
C1119	Capacitor polyester	100nF ±20%	100V	Philips	2222 344 24104
C1120	Capacitor polyester	100nF ±20%	100V	Philips	2222 344 24104
C1121	Capacitor polyester	10nF ±20%	250V	Philips	2222 344 40103
C1122	If fitted:				
	Capacitor ceramic	27pF ± 5%	400V	Ferroperm	9/0112.9
C1123	Capacitor trimmer teflon	2.5 - 45pF	NPO	DAU	107-5901-045
C1124	Capacitor polyester	100nF ±20%	100V	Philips	2222 344 24104
C1125	Capacitor polystyrene	1n0F ± 5%	125V	Philips	2222 425 21002
C1126	Capacitor polyester	100nF ±20%	100V	Philips	2222 344 24104
C1127	Capacitor polystyrene	1n5F ± 5%	125V	Philips	2222 425 21502
C1128	Capacitor polystyrene	3n3F ± 5%	125V	Philips	2222 425 23302
C1129	Capacitor polyester	100nF ±20%	100V	Philips	2222 344 24104
C1130	Capacitor polyester	100nF ±20%	100V	Philips	2222 344 24104
C1131	Capacitor polyester	100nF ±20%	100V	Philips	2222 344 24104
C1132	Capacitor polyester	100nF ±20%	100V	Philips	2222 344 24104
C1133	Capacitor polyester	100nF ±20%	100V	Philips	2222 344 24104
C1134	Capacitor polyester	100nF ±20%	100V	Philips	2222 344 24104
C1135	Capacitor polyester	100nF ±20%	100V	Philips	2222 344 24104
C1136	Capacitor polyester	100nF ±20%	100V	Philips	2222 344 24104
C1137	Capacitor polystyrene	560pF ± 2%	250V	Philips	2222 426 35601
C1138	Capacitor polyester	100nF ±20%	100V	Philips	2222 344 24104
C1139	Capacitor polystyrene	2n2F ± 5%	125V	Philips	2222 425 22202
C1140	Capacitor polyester	100nF ±20%	100V	Philips	2222 344 24104
C1141	Capacitor polyester	100nF ±20%	100V	Philips	2222 344 24104
C1142	Capacitor polyester	100nF ±20%	100V	Philips	2222 344 24104
C1143	Capacitor polyester	100nF ±20%	100V	Philips	2222 344 24104
D1101	Diode			Philips	1N4148
D1102	Diode			Philips	1N4148
D1103	Diode			Philips	1N4148
D1104	Diode			Philips	1N4148
D1105	Diode switch			Philips	BAW62
D1106	Diode switch			Philips	BAW62
D1107	Diode Zener	7.5V ± 5%	0.4W	Philips	BZX79C7V5
L1101	Coil	TL 013		S.P.	
L1102	Coil	TL 020		S.P.	
L1103	Coil	TL 076		S.P.	

MODULE NO: 1100

Symbol	*Description*		*Manufact.*	
L1104	Coil	TL 026	S.P.	
L1105	Coil	TL 013	S.P.	
L1106	Coil	TL 309	S.P.	6-0-23161
T1101	Transistor		Philips	BC 547
T1102	Transistor		Philips	BC 547
T1103	Transistor		Philips	BC 547
T1104	Transistor		Philips	BC 547
T1105	Transistor		Philips	BF 199
T1106	Transistor		Philips	BC 547
IC1101	Integrated circuit		RCA	CA 3019
T1101	LSB crystal filter 600 kHz		S.P.	C1002

f MICROPHONE AMPLIFIER S130X MODULE 1200 1/3

Symbol	Description	Manufact.	
R1201	Preset pot.meter, cermet 1Kohm ±20%0,5W	Philips	2322 482 20102
R1202	Resistor 560 ohm ±5% 1,6 W	Philips	2322 191 35601
R1203	Resistor 1Kohm ±5% 0,33W	Philips	2322 211 13102
R1204	Resistor 2,7Kohm ±5% 0,33W	Philips	2322 211 13272
R1205	Resistor 2,7Kohm ±5% 0,33W	Philips	2322 211 13272
R1206	Resistor 180 ohm ±5% 0,33W	Philips	2322 211 13181
R1207	Resistor 150 ohm ±5% 0,33W	Philips	2322 211 13151
R1208	Resistor 5,6Kohm ±5% 0,33W	Philips	2322 211 13562
R1209	Resistor 100Kohm ±5% 0,33W	Philips	2322 211 13104
R1211	Resistor 820 ohm ±5% 0,33W	Philips	2322 211 13821
R1212	Resistor 100Kohm ±5% 0,33W	Philips	2322 211 13104
R1213	Resistor 220Kohm ±5% 0,33W	Philips	2322 211 13224
R1214	Resistor 4,7Kohm ±5% 0,33W	Philips	2322 211 13472
R1215	Resistor 4,7Kohm ±5% 0,33W	Philips	2322 211 13472
R1216	Resistor 390 ohm ±5% 0,33W	Philips	2322 211 13391
R1217	Resistor 10Kohm ±5% 0,33W	Philips	2322 211 13103
R1218	Resistor 4,7Kohm ±5% 0,33W	Philips	2322 211 13472
R1219	Resistor 10Kohm ±5% 0,33W	Philips	2322 211 13103
R1220	Resistor 1Kohm ±5% 0,33W	Philips	2322 211 13102
R1221	Resistor 470 ohm ±5% 0,33W	Philips	2322 211 13471
R1222	Resistor 2,2Kohm ±5% 0,33W	Philips	2322 211 13222
R1223	Resistor 220Kohm ±5% 0,33W	Philips	2322 211 13224
R1224	Preset potmeter, cermet 100Kohm±20%0,5W	Philips	2322 482 20104
R1225	Resistor 1Kohm ±5% 0,33W	Philips	2322 211 13102
R1226	Resistor 10Kohm ±5% 0,33W	Philips	2322 211 13103
R1227	Resistor 4,53Kohm ±1% 0,33W	Philips	2322 151 54533
R1228	Resistor 4,53Kohm ±1% 0,33W	Philips	2322 151 54533
R1229	Resistor 100Kohm ±5% 0,33W	Philips	2322 211 13104
R1230	Resistor 1Kohm ±5% 0,33W	Philips	2322 211 13102
R1231	Resistor 2,2Kohm ±5% 0,33W	Philips	2322 211 13222
R1232	Preset potmeter cermet 470 ohm±20% 0,5W	Philips	2322 482 20471
R1233	Resistor 47Kohm ±5% 0,33W	Philips	2322 211 13473
R1234	Resistor 47Kohm ±5% 0,33W	Philips	2322 211 13473
R1235	Resistor 2,2Kohm ±5% 0,33W	Philips	2322 211 13222
R1236	Resistor 1Kohm ±5% 0,33W	Philips	2322 211 13102
R1237	Resistor 1Kohm ±5% 0,33W	Philips	2322 211 13102
R1238	Resistor 3,9Kohm ±5% 0,33W	Philips	2322 211 13392
R1239	Resistor 2,2Kohm ±5% 0,33W	Philips	2322 211 13222
R1240	Resistor 2,2Kohm ±5% 0,33W	Philips	2322 211 13222

e MICROPHONE AMPLIFIER S130X Module 1200 2/3

Symbol	Description	Manufact.	
R1241	Resistor 2,2Kohm ±5% 0,33W	Philips	2322 211 13222
R1242	Resistor 390 ohm ±5% 0,33W	Philips	2322 211 13391
R1243	Resistor 270 ohm ±5% 0,33W	Philips	2322 211 13271
R1244	Resistor 120 ohm ±5% 0,33W	Philips	2322 211 13121
R1245	Resistor 1Kohm ±5% 0,33W	Philips	2322 211 13102
R1246	Resistor 1Kohm ±5% 0,33W	Philips	2322 211 13102
R1247	Resistor 1Kohm ±5% 0,33W	Philips	2322 211 13102
R1248	Resistor 15Kohm ±5% 0,33W	Philips	2422 211 13153
R1249	Resistor 10Kohm ±5% 0,33W	Philips	2322 211 13102
R1250	Resistor 1Kohm ±5% 0,33W	Philips	2422 211 13102
C1201	Capacitor electrolytic 33uF 20% 16V	ROE	EKI00AA233D
C1202	Capacitor electrolytic 4,7uF 20% 50V	ROE	EKI00AA147H
C1203	Capacitor electrolytic 0,22uF 20% 50V	ROE	EKI00AA022H
C1204	Capacitor ceramic 1nF-20/+80% 40V	Ferroperm	9/0129,8
C1205	Capacitor ceramic 1nF-20/+80% 40V	Ferroperm	9/0129,8
C1206	Capacitor electrolytic 4,7uF 20% 50V	ROE	EKI00AA147H
C1207	Capacitor tantal 100nF-20/+50% 35V	ERO	ETP 1A
C1208	Capacitor electrolytic 470uF-10/+50% 10V	Siemens	B41283-A3477-T
C1209	Capacitor polyester 100nF ±20% 100V	Philips	2222 344 24104
C1210	Capacitor electrolytic 4,7uF 20% 50V	ROE	EKI00AA147H
C1211	Capacitor ceramic 150pF ±10% 25V	Ferroperm	9/0121,8
C1212	Capacitor polyester 100nF ±5% 100V	Philips	2222 344 23104
C1213	Capacitor polyester 68nF ±5% 250V	Philips	2222 344 43683
C1214	Capacitor electrolytic 10uF-10/+50% 63V	Siemens	B41283-A8106-T
C1215	Capacitor polyester 68nF ±5% 250V	Philips	2222 344 43683
C1216	Capacitor electrolytic 4,7uF 20% 50V	ROE	EKI00AA147H
C1217	Capacitor electrolytic 4,7uF 20% 50V	ROE	EKI00AA147H
C1218	Capacitor electrolytic 10uF 20% 35V	ROE	EKI00AA210F
C1219	Capacitor polyester 47nF ±10% 250V	Philips	2222 344 41473
C1220	Capacitor electrolytic 4,7uF 20% 50V	ROE	EKI00AA147H
C1221	Capacitor electrolytic 4,7uF 20% 50V	ROE	EKI00AA147H
C1222	Capacitor electrolytic 4,7uF 20% 50V	ROE	EKI00AA147H
C1223	Capacitor polyester 68nF ±10% 250V	Philips	2222 344 41683
C1224	Capacitor electrolytic 4,7uF 20% 50V	ROE	EKI00AA147H
C1225	Capacitor electrolytic 4,7uF 20% 50V	ROE	EKI00AA147H
C1226	Capacitor electrolytic 4,7uF 20% 50V	ROE	EKI00AA147H
C1227	Capacitor polyester 220nF ±20% 100V	Philips	2322 344 24224
L1201	Coil	S.P.	TL 219

c MICROPHONE AMPLIFIER S130X Module 1200 3/3

Symbol	*Description*	*Manufact.*	
T1201	Transistor	Philips	BC 338
T1202	Transistor	Philips	BF 256 B
T1203	Transistor	Philips	BC 548B
T1204	Transistor	Philips	BC 548B
T1205	Transistor	Philips	BC 548B
T1206	Transistor	Philips	BC 548B
T1207	Transistor	Philips	BC 558B
T1208	Transistor	Philips	BC 558B
T1209	Transistor	Philips	BC 548B
T1210	Transistor	Philips	BC 548B
T1211	Transistor	Philips	BC 548B
T1212	Transistor	Philips	BC 548B
T1213	Transistor	Philips	BC 548B
D1201	Diode, zener 5.1V ±5% 0,4W	Philips	BZX79 C5V1
D1202	Diode, zener 5.1V ±5% 0.4W	Philips	BZX79 C5V1
D1203	Diode, silicon	Philips	BAV 21
D1204	Diode, zener 7.5V ±5% 0.4W	Philips	BZX79 C7V5
D1205	Diode, silicon	Philips	BAV 21
D1206	Diode, switch	Philips	BA 182
D1207	Diode, switch	Philips	BA 182
D1208	Diode, switch	Philips	BA 182
D1209	Diode, switch	Philips	BA 182
IC1201	Integrated circuit	Motorola	MC14013 BC

ALARM SIGNAL GENERATOR S1300/01/02/03/04 Module 1300 1/2

Symbol	Description			Manufact.	
R1301	Resistor	270 ohm ±5%	1,6W	PHILIPS	2322 191 50271
R1302	Resistor	150 ohm ±5%	0,33W	PHILIPS	2322 211 13151
R1303	Resistor	4,7 kohm ±5%	0,33W	PHILIPS	2322 211 13472
R1304	Resistor	3,3 kohm ±5%	0,33W	PHILIPS	2322 211 13332
R1305	Resistor	10 kohm ±5%	0,33W	PHILIPS	2322 211 13103
R1306	Resistor	33 kohm ±5%	0,33W	PHILIPS	2322 211 13333
R1307	Resistor	3,3 kohm ±5%	0,33W	PHILIPS	2322 211 13332
R1308	Resistor	1,2 kohm ±5%	0,33W	PHILIPS	2322 211 13122
R1309	Resistor	330 ohm ±5%	0,33W	PHILIPS	2322 211 13331
R1310	Resistor	470 ohm ±5%	0,33W	PHILIPS	2322 211 13471
R1311	Resistor	18 kohm ±5%	0,33W	PHILIPS	2322 211 13183
R1312	Resistor	10 kohm ±5%	0,33W	PHILIPS	2322 211 13103
R1313	Resistor	1,5 kohm ±5%	0,33W	PHILIPS	2322 211 13152
R1314	Resistor	4,7 kohm ±5%	0,33W	PHILIPS	2322 211 13472
R1315	Resistor	10 kohm ±5%	0,33W	PHILIPS	2322 211 13103
R1316	Resistor	10 kohm ±5%	0,33W	PHILIPS	2322 211 13103
C1301	Capacitor Polyester	0,1uF ±10%	100V	SIEMENS	B32510-D1104K
C1302	Capacitor Ceramic	10pF ±0,5pF	50V	KCK	HE40SJPH100D
S1303	Capacitor Electrolyt	22uF ±20%	25V	ERO	EKI00AA222E
S1304	Capacitor Polyester	0,22uF±10%	100V	SIEMENS	B32560-D1224K
S1305	Capacitor Ceramic	150pF ±5%	50V	KCK	HE40SJPH151J
S1306	Capacitor Ceramic	10nF -20/+80%	50V	KCK	HE70SJYF103Z
S1307	Capacitor Polyester	0,22uF±10%	100V	SIEMENS	B32560-D1224K
C1308	Capacitor Polyester	10nF ±10%	400V	SIEMENS	B32510-D6103K
C1309	Capacitor Polyester	10nF ±10%	400V	SIEMENS	B32510-D6103K
C1310	Capacitor Polyester	0,1uF ±10%	100V	SIEMENS	B32510-D1104K
C1311	Capacitor Polyester	0,1uF ±10%	100V	SIEMENS	B32510-D1104K
C1312	Capacitor Polyester	0,1uF ±10%	100V	SIEMENS	B32510-D1104K
C1313	Capacitor Polyester	0,1uF ±10%	100V	SIEMENS	B32510-D1104K

A ALARM SIGNAL GENERATOR S1300/01/02/03/04 Module 1300 2/2

Symbol	Description	Manufact.	
C1314	Capacitor polyester 0,1uF ±10% 100V	SIEMENS	B32510-D1104K
C1315	Capacitor polyester 0,1uF ±10% 100V	SIEMENS	B32510-D1104K
L1301	Coil 6uH ±5%	KASCHKE	Bauform 2205 type 4000
D1301	Diode Ge	ITT	AA143
T1301	Transistor	PHILIPS	BC548B
T1302	Transistor	PHILIPS	BC548B
T1303	Transistor	PHILIPS	BF199
T1304	Transistor	PHILIPS	2N2368
T1305	Transistor	PHILIPS	BC558B
IC1301	Voltage Regulator	NATIONAL	LM78L05ACZ
IC1302	Integrated Circuit	MOTOROLA	MC14081BCP
IC1303	Integrated Circuit	MOTOROLA	MC14071BCP
IC1304	Integrated Circuit	MOTOROLA	MC14082BCP
IC1305	Integrated Circuit	MOTOROLA	MC14040BCP
IC1306	Integrated Circuit	MOTOROLA	MC14040BCP
IC1307	Integrated Circuit	MOTOROLA	MC14040BCP
IC1308	Integrated Circuit	MOTOROLA	MC14027BCP
IC1309	Integrated Circuit	MOTOROLA	MC14073BCP
IC1310	Integrated Circuit	MOTOROLA	MC14040BCP
IC1311	Integrated Circuit	MOTOROLA	MC140027BCP
IC1312	Integrated Circuit	MOTOROLA	MC140073BCP
IC1313	Integrated Circuit	TEXAS	SN74LS197N

a	OUTPUT FILTER S1302/3/4	Module 1400	1/1
Symbol	*Description*	*Manufact.*	
C1401	Capacitor polystyrene 160pF ±2% 630V	Philips	2222 427 31601
C1402	Capacitor ceramic 39pF ±5% 50V	K.C.K.	HE50SJPH390J
C1403	Capacitor ceramic 39pF ±5% 50V	K.C.K.	HE50SJPH390J
C1404	Capacitor ceramic 39pF ±5% 50V	K.C.K.	HE50SJPH390J
C1405	Capacitor polystyrene 160pF ±2% 630V	Philips	2222 427 31601
L1401	Coil TL225	S.P.	6-0-22755
L1402	Coil TL227	S.P.	6-0-22757
L1403	Coil TL226	S.P.	6-0-22756
L1404	Coil TL225	S.P.	6-0-22755

a BANDFILTER S1300 1/4

Symbol	Description		Manufact.	
R1501	Resistor	220 ohm ±5% 0,33W	Philips	2322 211 13221
R1502	Resistor	470 ohm ±5% 0,33W	Philips	2322 106 33471
R1503	Resistor	39 ohm ±5% 0,33W	Philips	2322 211 13399
R1504	Resistor	120 ohm ±5% 0,33W	Philips	2322 211 13121
R1505	Resistor	10 ohm ±5% 0,33W	Philips	2322 211 13109
R1506	Resistor	27 ohm ±5% 0,33W	Philips	2322 211 13279
R1507	Resistor	120 ohm ±5% 0,5 W	Philips	2322 212 13121
R1508	Resistor	390 ohm ±5% 0,33W	Philips	2322 106 33391
R1509	Resistor	1,5Kohm ±5% 0,33W	Philips	2322 211 13152
R1510	Not mounted			
R1511	Resistor	390 ohm ±5% 0,33W	Philips	2322 106 33391
R1512	Resistor	1,5Kohm ±5% 0,33W	Philips	2322 211 13152
R1513	Not mounted			
R1514	Resistor	390 ohm ±5% 0,33W	Philips	2322 106 33391
R1515	Resistor	1,5Kohm ±5% 0,33W	Philips	2322 211 13152
R1516	Not mounted			
R1517	Resistor	390 ohm ±5% 0,33W	Philips	2322 106 33391
R1518	Resistor	1,5Kohm ±5% 0,33W	Philips	2322 211 13152
R1519	Resistor	15Kohm ±5% 0,33W	Philips	2322 211 13153
R1520	Resistor	390 ohm ±5% 0,33W	Philips	2322 106 33391
R1521	Resistor	1,5Kohm ±5% 0,33W	Philips	2322 211 13152
R1522	Resistor	15Kohm ±5% 0,33W	Philips	2322 211 13153
R1523	Resistor	390 ohm ±5% 0,33W	Philips	2322 106 33391
R1524	Resistor	1,5Kohm ±5% 0,33W	Philips	2322 211 13152
R1525	Resistor	22Kohm ±5% 0,33W	Philips	2322 211 13223
R1526	Resistor	180Kohm ±5% 0,33W	Philips	2322 211 13184
R1527	Resistor	390 ohm ±5% 0,33W	Philips	2322 106 33391
R1528	Resistor	1,5Kohm ±5% 0,33W	Philips	2322 211 13152
R1529	Resistor	680 ohm ±5% 0,33W	Philips	2322 211 13681
R1530	Resistor	150 ohm ±5% 0,33W	Philips	2322 211 13151
R1531	Resistor	180 ohm ±5% 0,33W	Philips	2322 211 13181
R1532	Resistor	68 ohm ±5% 0,33W	Philips	2322 211 13689
R1533	Resistor	18 ohm ±5% 0,33W	Philips	2322 211 13189

a	BAND-FILTER S1302/3/4			MODULE 1500	2/4
Symbol	*Description*			*Manufact.*	
C1506	Capacitor polyester	100nF ±20%	100V	Philips	2222 344 24104
C1507	Capacitor polyester	22nF ±20%	400V	Philips	2222 344 54223
C1508	Capacitor polyester	22nF ±20%	400V	Philips	2222 344 54223
C1509	Capacitor polystyrene	75pF ± 2%	630V	Philips	2222 427 37509
C1510	Capacitor polystyrene	47pF ±2,5%	160V	Siemens	B31063-B1470-H
C1511	Capacitor ceramic	20pF ± 5%	50V	K.C.K.	HE40SJPH20OJ
C1512	Capacitor ceramic	15pF ± 5%	50V	K.C.K.	HE40SJPH15OJ
C1513	Capacitor polystyrene	220pF ± 2%	630V	Philips	2222 427 32201
C1514	Capacitor polystyrene	160pF ± 2%	630V	Philips	2222 427 31601
C1515	Capacitor ceramic	6p8F ±0.5pF	50V	K.C.K.	HE40SJPH068D
C1516	Capacitor ceramic	4p7F ±0.5pF	50V	K.C.K.	HE40SJPH047D
C1517	Capacitor polyester	22nF ±20%	400V	Philips	2222 344 54223
C1518	Capacitor polyester	22nF ±20%	400V	Philips	2222 344 54223
C1519	Capacitor polystyrene	130pF ± 2%	630V	Philips	2222 427 31301
C1520	Capacitor polystyrene	91pF ± 2%	630V	Philips	2222 427 39109
C1521	Capacitor polyester	22nF ±20%	400V	Philips	2222 344 54223
C1522	Capacitor polyester	22nF ±20%	400V	Philips	2222 344 54223
C1523	Capacitor polyester	22nF ±20%	400V	Philips	2222 344 54223
C1524	Capacitor polyester	22nF ±20%	400V	Philips	2222 344 54223
C1525	Capacitor polystyrene	91pF ± 2%	630V	Philips	2222 427 39109
C1526	Capacitor polystyrene	120pF ± 2%	630V	Philips	2222 427 31201
C1527	Capacitor ceramic	8p2F ±0.25pF	500V	K.C.K.	HM60SJCH082G
C1528	Capacitor ceramic	10pF ±0.5pF	500V	K.C.K.	HM60SJCH100G
C1529	Capacitor polystyrene	150pF ± 2%	630V	Philips	2222 427 31501
C1530	Capacitor polystyrene	180 pF± 2%	630V	Philips	2222 427 31801
C1531	Capacitor polystyrene	240pF ± 2%	630V	Philips	2222 427 32401
C1532	Capacitor polystyrene	360pF ± 2%	630V	Philips	2222 427 33601
C1533	Capacitor polyester	22nF ±20%	400V	Philips	2222 344 54223
C1534	Capacitor polyester	22nF ±20%	400V	Philips	2222 344 54223
C1535	Capacitor polyester	22nF ±20%	400V	Philips	2222 344 54223
C1536	Capacitor polyester	22nF ±20%	400V	Philips	2222 344 54223
C1537	Capacitor polystyrene	62pF ± 2%	630V	Philips	2222 427 36209
C1538	Capacitor polystyrene	75pF ± 2%	630V	Philips	2222 427 37509
C1539	Capacitor ceramic	5p6F ±0.25pF	500V	K.C.K.	HM60SJCH056G
C1540	Capacitor ceramic	6p8F ±0.25pF	500V	K.C.K.	HM60SJCH068G
C1541	Capacitor polystyrene	100pF ± 2%	630V	Philips	2222 427 31001
C1542	Capacitor polystyrene	120pF ± 2%	630V	Philips	2222 427 31201
C1543	Capacitor polystyrene	160pF ± 2%	630V	Philips	2222 427 31601
C1544	Capacitor polystyrene	200pF ± 2%	630V	Philips	2222 427 32001
C1545	Capacitor polystyrene	18pF ± 5%	500V	K.C.K.	HM60SJCH180J

a	BAND-FILTER S1302/3/4	Module 1500	3/4

Symbol	*Description*	*Manufact.*	
C1546	Capacitor polyester 100nF ±20% 100V	Philips	2222 344 24104
C1547	Capacitor ceramic 10nF-20/+80% 50V	K.C.K.	HE70SJYF103Z
C1548	Capacitor polyester 100nF ±20% 100V	Philips	2222 344 24104
C1549	Capacitor ceramic 22pF ± 5% 500V	K.C.K.	HM60SJPH220J
C1550	Capacitor ceramic 10nF-20/+80% 50V	K.C.K.	HE70SJYF103Z
C1551	Capacitor polyester 100nF ±20% 100V	Philips	2222 344 24104
C1552	Capacitor polyester 100nF ±20% 100V	Philips	2222 344 24104
C1553	Capacitor polyathylen 10nF ±10% 400V	Siemens	B32510-D6103-K
C1554 to C1565	Not used		
L1501	Coil TL145	S.P.	6-0-22759
L1502	Coil TL147	S.P.	6-0-22761
L1503	Coil TL146	S.P.	6-0-22760
L1504	Coil TL148	S.P.	6-0-22762
L1505	Coil TL243	S.P.	6-0-21566
L1506	Coil TL241	S.P.	6-0-21564
L1507	Coil TL244	S.P.	6-0-21567
L1508	Coil TL242	S.P.	6-0-21565
L1509	Coil TL247	S.P.	6-0-21570
L1510	Coil TL245	S.P.	6-0-21568
L1511	Coil TL248	S.P.	6-0-21571
L1512	Coil TL246	S.P.	6-0-21569
L1513	Coil 1uH ±10% Type 15	Airco	4425-6K
L1514 to L1517	Not used		
T1501	Transistor	Philips	BFW17A
T1502	Transistor	Philips	BFW17A
T1503	Transistor	Philips	BFW17A
D1501	Diode, switch	Philips	BA243
D1502	Diode, switch	Philips	BA243
D1503	Diode, switch	Philips	BA243
D1504	Diode, switch	Philips	BA243
D1505	Diode, switch	Philips	BA243
D1506	Diode, switch	Philips	BA243
D1507	Diode, switch	Philips	BA243

a BAND-FILTER S1302/3/4 Module 1500 4/4

Symbol	*Description*	*Manufact.*	
D1508	Diode, switch	Philips	BA243
D1509	Diode, switch	Philips	BA243
D1510	Diode, swirch	Philips	BA243
D1511	Diode, switch	Philips	BA243
D1512	Diode, switch	Philips	BA243
D1513	Diode, switch	Philips	BA243
D1514	Diode, switch	Philips	BA243
D1515	Diode, switch	Philips	BA243
D1516	Diode, switch	Philips	BA243
D1517	Diode, switch	Philips	BA243
D1518	Diode, switch	Philips	BA243
D1519	Diode, switch	Philips	BA243
D1520	Diode, switch	Philips	BA243
D1521 to D1526	Not used		
TR1501	Transformer TL249	S.P.	6-0-21572
TR1502	Transformer TL285	S.P.	6-0-22758

MODULE NO: 1600

D MIXER UNIT S130X MODULE 1600 1/3

Symbol	Description		Manufact.	
R1601	Resistor	820 ohm ± 5% 0.33W	Philips	2322 211 13821
R1602	Resistor	1.5Kohm ± 5% 0.33W	Philips	2322 211 13152
R1603	Resistor	6.8Kohm ± 5% 0.33W	Philips	2322 211 13682
R1604*	Resistor	820 ohm/680 ohm ± 5% 0.33W	Philips	2322 211 13821/13681
R1605	Resistor	3.3Kohm ± 5% 0.33W	Philips	2322 211 13332
R1606	Resistor	33 ohm ± 5% 0.33W	Philips	2322 211 13339
R1607	Resistor NTC	1Kohm ±10% 0.5W	Philips	2322 642 12102
R1608	Resistor	220 ohm ± 5% 0.33W	Philips	2322 211 13221
R1609	Resistor	330 ohm ± 5% 0.33W	Philips	2322 211 13331
R1610	Resistor	150 ohm ± 5% 0.33W	Philips	2322 211 13151
R1611	Resistor	15 ohm ± 5% 0.33W	Philips	2322 211 13159
R1612	Resistor	4.7Kohm ± 5% 0.33W	Philips	2322 211 13472
R1613	Resistor	3.3Kohm ± 5% 0.33W	Philips	2322 211 13332
R1614	Resistor	15 ohm ± 5% 0.33W	Philips	2322 211 13159
R1615	Resistor	68 ohm ± 5% 0.33W	Philips	2322 211 13689
R1616	Resistor	68 ohm ± 5% 0.33W	Philips	2322 211 13689
R1617	Resistor	180 ohm ± 5% 0.33W	Philips	2322 211 13181
R1618	Resistor	1Kohm ± 5% 0.33W	Philips	2322 211 13102
R1619	Resistor	27Kohm ± 5% 0.33W	Philips	2322 211 13273
R1620	Resistor	1.8Kohm ± 5% 0.33W	Philips	2322 211 13182
R1621	Resistor	470 ohm ± 5% 0.33W	Philips	2322 211 13471
R1622	Resistor	4.7Kohm ± 5% 0.33W	Philips	2322 211 13472
R1623	Resistor	3.9Kohm ± 5% 0.33W	Philips	2322 211 13392
R1624	Resistor	470 ohm ± 5% 0.33W	Philips	2322 211 13471
R1625	Preset pot.meter cermet	2.2Kohm ±20% 0.5W	Philips	2322 482 20222
R1626	Resistor	2.2Kohm ± 5% 0.33W	Philips	2322 211 13222
R1627	Resistor	2.2Kohm ± 5% 0.33W	Philips	2322 211 13222
R1628	Resistor	10Kohm ± 5% 0.33W	Philips	2322 211 13103
R1629	Resistor	27Kohm ± 5% 0.33W	Philips	2322 211 13273
R1630	Resistor	47 ohm ± 5% 0.33W	Philips	2322 211 13479
R1631	Preset pot.meter cermet	220 ohm ±20% 0.5W	AB	HC10 200 150 220 20%
R1632	Resistor	220 ohm ± 5% 0.33W	Philips	2322 211 13221
R1633	Resistor	1Kohm ± 5% 0.33W	Philips	2322 211 13102
R1634	Resistor	8.2Kohm ± 5% 0.33W	Philips	2322 211 13822
R1635	Resistor	680 ohm ± 5% 0.33W	Philips	2322 211 13681
R1636	Resistor	100 ohm ± 5% 0.33W	Philips	2322 211 13101
R1637	Resistor	5.6Kohm ± 5% 0.33W	Philips	2322 211 13562
R1638	Resistor	22Kohm ± 5% 0.33W	Philips	2322 211 13223
R1639	Resistor	220 ohm ± 5% 0.4W	Philips	2322 181 53221
R1640	Resistor	100 ohm ± 5% 0.33W	Philips	2322 211 13101
R1641	Resistor	47 ohm ± 5% 0.33W	Philips	2322 211 13479

G	MIXER UNIT S130X MODULE 1600				2/3
Symbol	*Description*			*Manufact.*	
R1642	Resistor	220 ohm ± 5%	0.33W	Philips	2322 211 13221
R1643	Resistor	33 ohm ± 5%	0.33W	Philips	2322 211 13339
R1644	Resistor	150 ohm ± 5%	0.5W	Philips	2322 212 13151
R1645	Resistor	18 ohm ± 5%	0.33W	Philips	2322 211 13189
R1646	Resistor	120 ohm ± 5%	0.33W	Philips	2322 106 33121
R1647	Resistor	120 ohm ± 5%	0.33W	Philips	2322 106 33121
R1648	Resistor	330 ohm ± 5%	0.33W	Philips	2322 106 33331
	In exciters with 3 pos. power switch only:				
R1619	Resistor	12Kohm ± 5%	0.33W	Philips	2322 211 13123
C1601*	Capacitor electrolytic	10uF 20%	35V	ROE	EKI00AA210F
C1602	Capacitor polyester	47nF ±20%	250V	Philips	2222 344 40473
C1603*	Capacitor electrolytic	10uF 20%	35V	ROE	EKI00AA210F
C1604	Capacitor polyester	47nF ±20%	250V	Philips	2222 344 40473
C1605*	Capacitor polyester	22nF/10nF ±20%	400V	Philips	2222 344 54223/54100
C1606	Capacitor polyester	47nF ±20%	250V	Philips	2222 344 40473
C1607*	Capacitor polyester	22nF/1nF ±20%	400V	Philips	2222 344 54223/54109
C1608	Capacitor polystyrene	2.2nF ± 5%	160V	Philips	2222 425 22202
C1609	Capacitor polyester	22nF ±20%	400V	Philips	2222 344 54223
C1610	Capacitor polyester	47nF ±20%	250V	Philips	2222 344 40473
C1611	Capacitor polyester	47nF ±20%	250V	Philips	2222 344 40473
C1612	Capacitor polyester	22nF ±20%	400V	Philips	2222 344 54223
C1613	Capacitor ceramic	12pF ± 5%	400V	Ferroperm	9/0112.9
C1614	Capacitor ceramic	15pF ± 5%	400V	Ferroperm	9/0112.9
C1615	Capacitor polystyrene	270pF ± 2%	630V	Philips	2222 427 32701
C1616	Capacitor polystyrene	680pF ± 2%	250V	Philips	2222 426 36801
C1617	Capacitor polyester	22nF ±20%	400V	Philips	2222 344 54223
C1618	Capacitor ceramic	22pF ±10%	400V	Ferroperm	9/0112.9
C1619	Capacitor polyester	22nF ±20%	400V	Philips	2222 344 54223
C1620	Capacitor polystyrene	330pF ± 2%	630V	Philips	2222 426 36801
C1621	Capacitor polystyrene	820pF ± 2%	630V	Philips	2222 426 38201
C1622	Capacitor polystyrene	180pF ± 2%	630V	Philips	2222 427 31801
C1623	Capacitor polystyrene	1.5nF ± 2%	160V	Philips	2222 425 31502
C1624	Capacitor polyester	100nF ±20%	100V	Philips	2222 344 24104
C1625	Capacitor polyester	100nF ±20%	100V	Philips	2222 344 24104
C1626	Capacitor polyester	100nF ±20%	100V	Philips	2222 344 24104
C1627	Capacitor polyester	100nF ±20%	100V	Philips	2222 344 24104
C1628	Capacitor polyester	100nF ±20%	100V	Philips	2222 344 24104
*	In S1302/03/04: C1601 and C1603 not fitted, C1605 changed into 10nF, C1607 changed into 1nF, R1604 changed into 680 ohm.				

MODULE NO: 1600

Symbol	*Description*	*Manufact.*	
C1629	Capacitor MKT 10nF ±20% 100V	ERO	MKT1826-310/01 6-G
C1630	Capacitor polyester 100nF ±20% 100V	Philips	2222 344 24104
L1601	Coil	S.P.	TL 264
L1602	Coil	S.P.	TL 265
L1603	Coil	S.P.	TL 254
L1604	Coil	S.P.	TL 255
TR1601	W.B. Trafo	S.P.	TL 266
TR1602	W.B. Trafo	S.P.	TL 256
T1601	Transistor	Philips	BF 199
T1602	Transistor	Philips	BF 494
T1603	Transistor	Philips	BF 494
T1604	Transistor	Philips	BF 494
T1605	Transistor	Philips	BF 199
T1606	Transistor	Philips	BFW 17A
D1601	Diode, silicon	Philips	BAV 21
D1602	Diode, silicon	Philips	BAV 21
FL1601	Crystal filter 10.697 MHz	S.P.	C1012
M1601	Mixer, double balanced	S.P.	C1007

d A2H - OSCILLATOR & DELAY UNIT S130X Module 1800 1/2

Symbol	Description		Manufact.	
R1801	Resistor 1kohm ± 5%	0.33W	Philips	2322 211 13102
R1802	Resistor 100kohm ± 5%	0.33W	Philips	2322 211 13104
R1803	Resistor 39kohm ± 5%	0.33W	Philips	2322 211 13393
R1804	Resistor 4.7kohm ± 5%	0.33W	Philips	2322 211 13472
R1805	Resistor 33kohm ± 5%	0.33W	Philips	2322 211 13333
R1806	Preset pot.meter 1kohm ± 20%	0.5W	Philips	2322 482 20102
R1807	Resistor 1kohm ± 5%	0.33W	Philips	2322 211 13102
R1808	Resistor 2.2kohm ± 5%	0.33W	Philips	2322 211 13222
R1809	Resistor 56kohm ± 5%	0.33W	Philips	2322 211 13563
R1810	Resistor 120kohm ± 5%	0.33W	Philips	2322 211 13124
R1811	Resistor 10kohm ± 5%	0.33W	Philips	2322 211 13103
R1812	Resistor 3.9kohm ± 5%	0.33W	Philips	2322 211 13392
R1813	Resistor 10kohm ± 5%	0.33W	Philips	2322 211 13103
R1814	Resistor 56kohm ± 5%	0.33W	Philips	2322 211 13563
R1815	Resistor 10kohm ± 5%	0.33W	Philips	2322 211 13103
R1816	Resistor 10kohm ± 5%	0.33W	Philips	2322 211 13103
R1817	Resistor 3.9kohm ± 5%	0.33W	Philips	2322 211 13392
R1818	Resistor 56kohm ± 5%	0.33W	Philips	2322 211 13563
R1819	Preset pot.meter 100kohm ±20%	0.5W	Philips	2322 482 20104
R1820	Resistor 56kohm ± 5%	0.33W	Philips	2322 211 13563
R1821	Resistor 3.9kohm ± 5%	0.33W	Philips	2322 211 13392
R1822	Resistor 10kohm ± 5%	0.33W	Philips	2322 211 13103
R1823	Resistor 10kohm ± 5%	0.33W	Philips	2322 211 13103
R1824	Resistor 56kohm ± 5%	0.33W	Philips	2322 211 13563
R1825	Resistor 10kohm ± 5%	0.33W	Philips	2322 211 13103
R1826	Resistor 10kohm ± 5%	0.33W	Philips	2322 211 13103
R1827	Resistor 3.9kohm ± 5%	0.33W	Philips	2322 211 13392
C1801	Capacitor electrolytic 10uF 20%	35V	ROE	EKI00AA21OF
C1802	Capacitor electrolytic 10uF 20%	35V	ROE	EKI00AA21OF
C1803	Capacitor electrolytic 4,7uF 20%	50V	ROE	EKI00AA147H
C1804	Capacitor polystyrene 56nF ± 1%	63V	Philips	2222 444 45603
C1805	Capacitor electrolytic 4,7uF 20%	50V	ROE	EKI00AA147H
C1806	Capacitor electrolytic 4,7uF 20%	50V	ROE	EKI00AA147H
C1807	Capacitor polyester 100nF ±10%	100V	Philips	2222 344 25104
C1808	Capacitor polyester 220nF ±10%	400V	Philips	2222 344 25224
C1809	Capacitor polyester 220nF ±10%	100V	Philips	2222 344 25224
C1810	Capacitor polyester 10nF ±20%	400V	Philips	2222 344 54103

Symbol	*Description*	*Manufact.*	
L1801	Coil	S.P.	TL 267
D1801	Diode, silicon	Philips	BAV 21
D1802	Diode, silicon	Philips	BAV 21
D1803	Diode, silicon	Philips	BAV 21
D1804	Diode, silicon	Philips	BAV 21
D1805	Diode, silicon	Philips	BAV 21
D1806	Diode, silicon	Philips	BAV 21
T1801	Transistor	Philips	BC 548
T1802	Transistor	Philips	BC 548
T1803	Transistor	Philips	BC 548
T1804	Transistor	Philips	BC 548
T1805	Transistor	Philips	BC 558
T1806	Transistor	Philips	BC 548
T1807	Transistor	Philips	BC 548
T1808	Transistor	Philips	BA 548
T1809	Transistor	Philips	BC 558
RE1801	Relay	Siemens	V23100-V4024-A001

a POWER SWITCH S1303/04 Module 2000 1/1

Symbol	Description		Manufact.	
R2001	Resistor	1 kohm ±5% 0,5 W	PHILIPS	2322 212 13102
R2002	Resistor	1 kohm ±5% 0,5 W	PHILIPS	2322 212 13102
R2003	Resistor	1 kohm ±5% 0,5 W	PHILIPS	2322 212 13102
R2004	Resistor	10 kohm ±5% 0,33W	PHILIPS	2322 211 13103
R2005	Resistor	10 kohm ±5% 0,33W	PHILIPS	2322 211 13103
R2006	Resistor	33 kohm ±5% 0,33W	PHILIPS	2322 211 13333
R2007	Resistor	10 kohm ±5% 0,33W	PHILIPS	2322 211 13103
R2008	Resistor	3,6 kohm ±5% 0,33W	PHILIPS	2322 211 13362
P2001	Potmeter	4,7 kohm ±5% 0,1 W	PHILIPS	2322 380 01206
C2001	Resistor Ceramic 10nF -20/+80%	50V	KCK	HE70SJYF103Z
T2001	Transistor		PHILIPS	BC548B
T2002	Transistor		PHILIPS	BD139
S2001	Switch		JEAN RENAU	RBD12FA3,3
S2002	Switch		JEAN RENAU	RBD12FA2,5
D2001	Diode Silicon		PHILIPS	BAV21

a	FREQUENCY CONTROL S1303/04			Module 2100	1/4
Symbol	*Description*			*Manufact.*	
R2101	Resistor	100 kohm ±5%	0,33W	Philips	2322 211 13104
R2102	Resistor	47 kohm ±5%	0,33W	Philips	2322 211 13473
R2103	Resistor	100 kohm ±5%	0,33W	Philips	2322 211 13104
R2104	Resistor	5,6 kohm ±5%	0,33W	Philips	2322 211 13562
R2105	Resistor	5,6 kohm ±5%	0,33W	Philips	2322 211 13562
R2106	Resistor	5,6 kohm ±5%	0,33W	Philips	2322 211 13562
R2107	Resistor	5,6 kohm ±5%	0,33W	Philips	2322 211 13562
R2108	Resistor	15 kohm ±5%	0,33W	Philips	2322 211 13153
R2109	Resistor	15 kohm ±5%	0,33W	Philips	2322 211 13153
R2110	Resistor	15 kohm ±5%	0,33W	Philips	2322 211 13153
R2111	Resistor	15 kohm ±5%	0,33W	Philips	2322 211 13153
R2112	Resistor	10 kohm ±5%	0,33W	Philips	2322 211 13103
R2113	Resistor	12 kohm ±5%	0,33W	Philips	2322 211 13123
R2114	Resistor	6,8 kohm ±5%	0,33W	Philips	2322 211 13682
R2115	Resistor	6,8 kohm ±5%	0,33W	Philips	2322 211 13682
R2116	Resistor	10 kohm ±5%	0,33W	Philips	2322 211 13103
R2117	Resistor	33 kohm ±5%	0,33W	Philips	2322 211 13333
R2118	Resistor	33 kohm ±5%	0,33W	Philips	2322 211 13333
R2119	Resistor	15 kohm ±5%	0,33W	Philips	2322 211 13153
R2120	Resistor	15 kohm ±5%	0,33W	Philips	2322 211 13153
R2121	Resistor	560 ohm ±5%	0,33W	Philips	2322 211 13561
R2122	Resistor	82 kohm ±5%	0,33W	Philips	2322 211 13823
R2123	Resistor	33 kohm ±5%	0,33W	Philips	2322 211 13333
R2124	Resistor	10 kohm ±5%	0,33W	Philips	2322 211 13103
R2125	Resistor	10 kohm ±5%	0,33W	Philips	2322 211 13103
R2126	Resistor	12 kohm ±5%	0,33W	Philips	2322 211 13123
R2127	Resistor	10 kohm ±5%	0,33W	Philips	2322 211 13103
R2128	Resistor	2,2 kohm ±5%	0,33W	Philips	2322 211 13222
R2129	Resistor	1,8 kohm ±5%	0,33W	Philips	2322 211 13182
R2130	Resistor	1,0 kohm ±5%	0,33W	Philips	2322 211 13102
R2131	Resistor	10 kohm ±5%	0,33W	Philips	2322 211 13103
R2132	Resistor	12 kohm ±5%	0,33W	Philips	2322 211 13123
R2133	Resistor	10 kohm ±5%	0,33W	Philips	2322 211 13103
R2134	Resistor	47 kohm ±5%	0,33W	Philips	2322 211 13473
R2135	Resistor	560 ohm ±5%	0,33W	Philips	2322 211 13561
R2136	Resistor	5,6 ohm ±5%	0,33W	Philips	2322 211 13568
R2137	Resistor	10 kohm ±5%	0,33W	Philips	2322 211 13103
R2138	Resistor	22 kohm ±5%	0,33W	Philips	2322 211 13223
R2139	Resistor	100 kohm ±5%	0,33W	Philips	2322 211 13104
R2140	Resistor	15 kohm ±5%	0,33W	Philips	2322 211 13153

Symbol	*Description*		*Manufact.*	
R2141	Resistor 15 kohm ±5%	0,33W	Philips	2322 211 13153
R2142	Resistor 1,8 kohm ±5%	0,33W	Philips	2322 211 13182
R2143	Resistor 27 kohm ±5%	0,33W	Philips	2322 211 13273
R2144	Resistor 12 kohm ±5%	0,33W	Philips	2322 211 13123
R2145	Resistor 10 kohm ±5%	0,33W	Philips	2322 211 13103
R2146	Resistor 3,9 kohm ±5%	0,33W	Philips	2322 211 13392
R2147	Resistor 2,7 kohm ±5%	0,33W	Philips	2322 211 13272
R2148	Resistor 10 kohm ±5%	0,33W	Philips	2322 211 13103
R2149	Resistor 2,7 kohm ±5%	0,33W	Philips	2322 211 13272
R2150	Resistor 10 kohm ±5%	0,33W	Philips	2322 211 13103
R2151	Resistor 10 kohm ±5%	0,33W	Philips	2322 211 13103
R2152	Resistor 8,2 kohm ±5%	0,33W	Philips	2322 211 13822
R2153	Resistor 100 kohm ±5%	0,33W	Philips	2322 211 13104
R2154	Resistor 82 kohm ±5%	0,33W	Philips	2322 211 13823
R2155	Resistor 100 ohm ±5%	0.4W	Philips	2322 181 53101
RA2101	Resistor Array 8x10 kohm ±5%	0,125W	ITT	VR8 10 kohm ±5%
RA2102	Resistor Array 8x10 kohm ±5%	0,125W	ITT	VR8 10 kohm ±5%
RA2103	Resistor Array 8x10 kohm ±5%	0,125W	ITT	VR8 10 kohm ±5%
RA2104	Resistor Array 8x10 kohm ±5%	0,125W	ITT	VR8 10 kohm ±5%
RA2105	Resistor Array 7x10 kohm ±5%	0,125W	ITT	VR7 10 kohm ±5%
C2101	Capacitor ceramic 10nF -20/+80%	50V	KCK	HE70SJYF103Z
C2102	Capacitor electrolytic 1ouF ±20%	35V	ERO	EKI00AA210F
C2105	Capacitor electrolytic 2,2uF ±20%	50V	ERO	EKI00AA122H
C2106	Capacitor polyetylen 4,7nF ±10%	400V	Siemens	B32510-D6472K
C2107	Capacitor polyester 10nF ±20%	100V	Philips	222 344 24103
C2108	Capacitor polyester 220nF ±10%	100V	Siemens	B32511-D1224-K
C2109	Capacitor electrolutic 2,2uF ±20%	50V	ERO	EKI00AA122H
C2110	Capacitor electrolytic 10uF ±20%	35V	Siemens	EKI00AA210F
C2111	Capacitor electrolytic 33uF ±20%	16V	ERO	EKI00AA233D
C2112	Capacitor ceramic 10nF -20/+80%	50V	KCK	HE70SJYF103Z
C2113	Capacitor electrolytic 47uF ±20%	10V	ERO	EKI00AA247C
C2114	Capacitor electrolytic 1uF ±20%	50V	ERO	EKI00AA110H
C2115	Capacitor electrolytic 10uF ±20%	35V	ERO	EKI00AA210F
C2116	Capacitor polyester 1nF ±10%	400V	Siemens	B32510-D6102-K
C2117	Capacitor polyester 0,22uF ±20%	100V	Philips	222 344 24224
C2118	Capacitor electrolytic 10uF ±20%	35V	ERO	EKI00AA210F
C2119	Capacitor electrolytic 22uF ±20%	25V	ERO	EKI00AA222E
C2120	Capacitor ceramic 10nF -20/+80%	50V	KCK	HE70SJYF103Z
C2121	Capacitor ceramic 10nF -20/+80%	50V	KCK	HE70SJYF103Z
C2122	Capacitor ceramic 10nF -20/+80%	50V	KCK	HE70SJYF103Z

Symbol	*Description*			*Manufact.*	
C2123	Capacitor electrolytic	4,7uF ±20%	50V	ERO	EKI00AA147H
C2124	Capacitor polyester	220nF ±10%	100V	Siemens	B32510-D1104-K
C2125	Capacitor polyester	220nF ±10%	100V	Siemens	B32510-D1104-K
C2126	Capacitor polyester	220nF ±10%	100V	Siemens	B32510-D1104-K
C2127	Capacitor polyester	220nF ±10%	100V	Siemens	B32510-D1104-K
C2128	Capacitor electrolytic	10uF ±20%	35V	ERO	EKI00AA210F
C2129	Capacitor poleyster	220nF ±10%	100V	Siemens	B32510-D1104-K
C2130	Capacitor polyester	220nF ±10%	100V	Siemens	B32510-D1104-K
C2131	Capacitor ceramic	10nF -20/80%	50VDC	NKE	DT 350 758L F 103 Z
D2101	Diode silicon			Philips	1N4148
D2102	Diode silicon			Philips	1N4148
D2103	Diode germanium			ITT	AA143
D2104	Diode germanium			ITT	AA143
D2105	Diode silicon			Philips	BZX79C5V1
D2106	Diode silicon			Philips	1N4148
D2107	Diode silicon			Philips	BZX79C18
D2108	Diode silicon			Philips	1N4148
IC2101	Integrated circuit			RCA	CD4056B
IC2102	Integrated circuit			RCA	CD4056B
IC2103	Integrated circuit			RCA	CD4056B
IC2104	Integrated circuit			RCA	CD4056B
IC2105	Integrated circuit			RCA	CD4056B
IC2106	Integrated circuit			RCA	CD4056B
IC2107	Integrated circuit			Texas	SN74LS195N
IC2108	Integrated circuit			Texas	SN74LS195N
IC2109	Integrated circuit			Texas	SN74LS195N
IC2110	Integrated circuit			Texas	SN74LS195N
IC2111	Integrated circuit			Texas	SN74LS195N
IC2112	Integrated circuit			Texas	SN74LS195N
IC2113	Integrated circuit			Texas	SN74LS32N
IC2114	Integrated circuit			MMI	6308-1
IC2115	Integrated circuit			MMI	6308-1
IC2116	Integrated circuit			Texas	SN74LS83N
IC2117	Integrated circuit			Texas	SN74LS32N
IC2118	Integrated circuit			Texas	SN74LS86N
IC2119	Integrated circuit			Texas	SN74LS148N
IC2120	Integrated circuit			Texas	SN74LS00N
IC2121	Integrated circuit			Texas	SN74LS173AN
IC2122	Integrated circuit			Texas	SN74LS151N

Symbol	*Description*	*Manufact.*	
IC2123	Integrated circuit	Texas	SN74LS86N
IC2124	Integrated circuit	Texas	SN74LS123N
IC2125	Integrated circuit	Motorola	MC14013BCP
IC2126	Integrated circuit	Texas	SN74LS109AN
IC2127	Integrated circuit	Texas	SN74LS32N
IC2128	Integrated circuit	Texas	SN74LS08N
IC2129	Integrated circuit	Texas	SN74LS74AN
IC2130	Integrated circuit	Texas	SN74LS197N
IC2131	Integrated circuit	Texas	SN7406
IC2132	Integrated circuit	Motorola	MC14011BCP
IC2133	Integrated circuit	National	LM339
T2101	Transistor	Philips	BC558B
T2102	Transistor	Philips	BC548B
T2103	Transistor	Philips	BC548B
T2104	Transistor	Philips	BC548B
T2105	Transistor	Philips	BC548B
T2106	Transistor	Philips	BC548B
T2107	Transistor	Philips	BC639
T2108	Transistor	Philips	BC639
T2109	Transistor	Philips	BC639
T2110	Transistor	Philips	BC639
T2111	Transistor	Philips	BC639
T2112	Transistor	Philips	BC558B
T2113	Transistor	Philips	BC558B
T2114	Transistor	Philips	BC548B

POSITION	DESCRIPTION		MANUFACTOR	TYPE	S.P.NUMB
	MODUL VCOfilter S1302/3/4	MODULE 22/2200	ESPERA	5-0-22750A US-MODE	600120
C2201	ELYT. 1uF 20% 50V S	1uF 20% 50VDC	ERO	EKI 00 AA 110 H M9	14.506
C2202	KOND. KS 100PF 630V 1% @F	100pF 1% 630V	*PHILIPS	2222 431 81001	10.400
C2203	KOND.POLY 0,01UF 400V 20%	0,01uF 400V 20%	ERO	MKT1822	11.126
C2204	KOND.KE. 10n -20/80% CL2	10nF -20/+80% CL2 50VDC	NKE	DT 350 758L F 103 Z 50V FLAT PACK	15.170
C2205	KOND. KS 56PF 630V 1% @F	56pF 1% 630V	*PHILIPS	2222 431 85609	10.394
C2206	KOND. KS 180PF 630V 1% @F	180pF 1% 630V	*PHILIPS	2222 431 81801	10.407
C2207	KOND. KS 240PF 630V 1% @F	240pF 1% 630V	*PHILIPS	2222 431 82401	10.410
C2208	KOND.KE 39P N150 5%	39P N150 5%	KCK	HE50SJPH390J	15.090
C2209	KOND.POLY 0,01UF 400V 20%	0,01uF 400V 20%	ERO	MKT1822	11.126
D2201	DIODE SWITCH BAV21	BAV21	PHILIPS	BAV21	25.340
D2202	DIODE SWITCH BAV21	BAV21	PHILIPS	BAV21	25.340
D2203	DIODE SWITCH BA243	BA243	AEG*	BA243	25.386
D2204	DIODE SWITCH BA243	BA243	AEG*	BA243	25.386
D2205	DIODE SWITCH BA243	BA243	AEG*	BA243	25.386
L2201	DROSS.33UH 10% 4465-2K	33UH 10% 4465-2K	AIRCO	4465-2K	20.163
L2202	SPOLE TL 295	TL295	S.P.RADIO	6-0-22763	400295
L2203	DROSS.33UH 10% 4465-2K	33UH 10% 4465-2K	AIRCO	4465-2K	20.163
L2204	SPOLE TL 296	TL296	S.P.RADIO	6-0-22764	400296
R2201	MODST.MF 100k 5% 0.4W @F	100k OHM 5% 0.4W	* PHILIPS	2322 181 53104	01.250
R2202	MODST.10K OHM 0,33W 5% S	10 KOHM 5% 0.33W	PHILIPS	2322 181 33103	01.725
R2203	MODST.MF 680R 5% 0.4W @F	680 OHM 5% 0.4W	* PHILIPS	2322 181 53681	01.195
R2204	MODST.MF 1k2 5% 0.4W @F	1.2k OHM 5% 0.4W	* PHILIPS	2322 181 53122	01.202
R2205	MODST.MF 100k 5% 0.4W @F	100k OHM 5% 0.4W	* PHILIPS	2322 181 53104	01.250
R2206	MODST.MF 1k5 5% 0.4W @F	1k5 OHM 5% 0.4W	* PHILIPS	2322 181 53152	01.204

POSITION	DESCRIPTION		MANUFACTOR	TYPE	S.P.NUMB
.	KEYBOARD S1303	MODULE 23/2300	ESPERA	5-0-22413	607567
R2301	RESISTOR MF	10k OHM 5% 0.4W	* PHILIPS	2322 181 53103	01.225
R2302	RESISTOR MF	10k OHM 5% 0.4W	* PHILIPS	2322 181 53103	01.225
R2303	RESISTOR MF	10k OHM 5% 0.4W	* PHILIPS	2322 181 53103	01.225
R2304	RESISTOR MF	10k OHM 5% 0.4W	* PHILIPS	2322 181 53103	01.225
R2305	RESISTOR MF	10k OHM 5% 0.4W	* PHILIPS	2322 181 53103	01.225
R2306	RESISTOR MF	10k OHM 5% 0.4W	* PHILIPS	2322 181 53103	01.225
R2307	RESISTOR MF	10k OHM 5% 0.4W	* PHILIPS	2322 181 53103	01.225
R2308	RESISTOR MF	10k OHM 5% 0.4W	* PHILIPS	2322 181 53103	01.225
R2309	RESISTOR MF	10k OHM 5% 0.4W	* PHILIPS	2322 181 53103	01.225
R2310	RESISTOR MF	10k OHM 5% 0.4W	* PHILIPS	2322 181 53103	01.225
R2311	RESISTOR MF	10k OHM 5% 0.4W	* PHILIPS	2322 181 53103	01.225
R2312	RESISTOR MF	10k OHM 5% 0.4W	* PHILIPS	2322 181 53103	01.225
S2301	SWITCH	ED/SP	ITT JEAURENAUD	ED/SP	43.600
S2302	SWITCH	ED/SP	ITT JEAURENAUD	ED/SP	43.600
S2303	SWITCH	ED/SP	ITT JEAURENAUD	ED/SP	43.600
S2304	SWITCH	ED/SP	ITT JEAURENAUD	ED/SP	43.600
S2305	SWITCH	ED/SP	ITT JEAURENAUD	ED/SP	43.600
S2306	SWITCH	ED/SP	ITT JEAURENAUD	ED/SP	43.600
S2307	SWITCH	ED/SP	ITT JEAURENAUD	ED/SP	43.600
S2308	SWITCH	ED/SP	ITT JEAURENAUD	ED/SP	43.600
S2309	SWITCH	ED/SP	ITT JEAURENAUD	ED/SP	43.600
S2310	SWITCH	ED/SP	ITT JEAURENAUD	ED/SP	43.600
S2311	SWITCH	ED/SP	ITT JEAURENAUD	ED/SP	43.600
S2312	SWITCH	ED/SP	ITT JEAURENAUD	ED/SP	43.600

POSITION	DESCRIPTION		MANUFACTOR	TYPE	S.P.NUMB
	DISPLAY UNIT	MODULE 24/2400	ESPERA	PRINT NR 5-0-22415	607574
J2401	PLUG (female)	25 POLE	*AMP	0-0643124-1	78.074
J2402	PLUG (female)	25 POLE	*AMP	0-0643124-1	78.074
LA2401	LAMP	15V 0,037A	OSHINO	BA5S-0L6003MB 153.420	45.032
LCD2401	DISPLAY	6 DIG. 7SEGMENT LCD	*HAMLIN	3918-365-920	25.701

a FREQUENCY CHECK S1304 Module 2500 1/1

Symbol	Description		Manufact.	
R2501	Resistor 560 ohm ±5%	0,33W	PHILIPS	2322 211 13561
R2502	Resistor 3,9 kohm ±5%	0,33W	PHILIPS	2322 211 13392
R2503	Resistor 2,2 kohm ±5%	0,33W	PHILIPS	2322 211 13222
R2504	Resistor 4,7 kohm ±5%	0,33W	PHILIPS	2322 211 13472
R2505	Resistor 4,7 kohm ±5%	0,33W	PHILIPS	2322 211 13472
RA2501	Resistor Array 8X10 kohm ±5%	0,125W	ITT	VR8 8X10 kohm
RA2502	Resistor Array 8X10 kohm ±5%	0,125W	ITT	VR8 8X10 kohm
RA2503	Resistor Array 8X10 kohm ±5%	0,125W	ITT	VR8 8X10 kohm
C2501	Capacitor Polyetylen 2n2F ±10%	400V	SIEMENS	B32510-D6222-K
C2502	Capacitor Polyetylen 22nF ±10%	250V	SIEMENS	B32510-D3223-K
C2504	Capacitor Polyetylen 0,22uF ±10%	100V	SIEMENS	B32510-D1224-K
C2505	Capacitor Polyetylen 0,22uF ±10%	100V	SIEMENS	B32510-D1224-K
C2506	Capacitor Polyetylen 0,22uF ±10%	100V	SIEMENS	B32510-D1224-K
C2508	Capacitor Electrolyt 1ouF ±20%	35V	ERO	EKI00AA210F
T2501	Transistor		PHILIPS	BC548B
IC2501	Integrated Circuit		TEXAS	SN74LS85N
IC2502	Integrated Circuit		TEXAS	SN74LS85N
IC2503	Integrated Circuit		TEXAS	SN74LS85N
IC2504	Integrated Circuit		TEXAS	SN74LS85N
IC2505	Integrated Circuit		TEXAS	SN74LS85N
IC2506	Integrated Circuit		TEXAS	SN74LS85N
IC2507	Integrated Circuit		NATIONAL	LM339
IC2508	Integrated Circuit		MMI	6308-1
IC2509	Integrated Circuit		TEXAS	SN74LS197N
IC2510	Integrated Circuit		MMI	6308-1
IC2511	Integrated Circuit		TEXAS	SN74LS197N
IC2512	Integrated Circuit		MMI	6308-1

CIRCUIT DESCRIPTIONS AND SCHEMATIC DIAGRAMS

CIRCUIT DESCRIPTION FOR DIVIDER UNIT S130X

This unit contains the logic part of phase locked LOOP 1 and phase locked LOOP 2.

The 10 MHz reference oscillator (TCXO), reference divider, 2 MHz spectrum generator, 600 kHz carrier generator, programmable dividers for LOOP 1 and LOOP 2 and the phase/frequency detectors for LOOP 1 and LOOP 2.

10 MHz REFERENCE

The frequency stability of the exciter is related to the 10 MHz TCXO X0101. The 10 MHz reference signal is amplified in the transistors T103 and T104.

REFERENCE DIVIDER

The counters IC115, IC111 and IC107 divides the 10 MHz reference signal down to respectively f_{R1} = 1 kHz and f_{R2} = 100 Hz.

2 MHz HARMONIC SPECTRUM GENERATOR

With a repetition frequency of 2 MHz the output Q_D of IC115 goes low and the nand-gates in IC114 will generate a narrow pulse due to the delay-time in the gates.

600 kHz GENERATOR

The output on IC111 pin 5, Q_B has a high contents of 600 kHz, which is amplified in the transistor T105 and filter in the tuned circuit L101, C136 and C137.

PROGRAMMABLE DIVIDER FOR LOOP 1

The variable frequency f_{T1} from LOOP 1 MIXER is amplified and shaped in T101 and IC109a. Independent of which 2 MHz band used the frequency f_{T1} will vary from 2699 kHz to 4698 kHz as the VCO varies 2 MHz. The programmable divider divides f_{T1} down to 1 kHz (dividing figure N_1). This means that there is 2000 frequencies in each 2 MHz band. The frequency is controlled by the FREQUENCY SELECTOR, which encodes the start figure P_1 into the BCD counters IC101, IC102, IC103 and IC104.

The stop figure S_1 is controlled from the gates IC108b and IC109c. When the counter outputs Q_A, Q_B ... etc. equals the stop figure S_1 + 2 the J-K flip-flop IC110b uses 2 clock pulses to load the start figure P_1 into the counters IC101, IC102, IC103 and IC104. The counter counts down from the start figure P_1 to stop figure S_1 and thus the dividing figure $N_1 = P_1 - S_1$.

LOOP 1 PHASE/FREQUENCY DETECTOR

The reference frequency f_{R1} = 1 kHz and the variable frequency f_{V1} = 1 kHz are fed into the phase/frequency detector IC106. The phase/frequency detector IC106 generates an error voltage, which is proportional to frequency or

phase difference between the two signals mentioned above. This error voltage is fed into the integrator on the LOOP 1 FILTER & ± 18V SUPPLY UNIT.

PROGRAMMABLE DIVIDER FOR LOOP 2

The variable frequency f_{T2} from the loop 2 mixer is amplified and shaped in T102 and IC109b. The frequency f_{T2} will vary between 98.1 kHz and 99.0 kHz depending on the 100 Hz programming. The programmable divider divides f_{T1} down to 100 Hz (dividing figure N_2).

From the FREQUENCY SELECTOR the start figure P_2 encodes into the BCD counter IC105.

The stop figure S_2 is controlled from the gate IC108a. When the counter outputs Q_A, Q_B, Q_C ... etc. equals the stop figure S_2 - 2 the J-K flip-flop IC110a uses 2 clock pulses to load the start figure P_2 into the counters IC105 and IC112. The counter will count up from the start figure P_2 to the stop figure S_2 and thus the dividing figure is $N_2 = S_2 - P_2$.

LOOP 2 PHASE/FREQUENCY DETECTOR

The reference frequency f_{R2} = 100 Hz and the variable frequency f_{V1} = 100 Hz, are fed into the phase/frequency detector IC113. The phase/frequency detector IC113 generates an error voltage proportional to the frequency or the phase difference between the two signals mentioned above. This error voltage is fed into the integrator on the VCXO & LOOP 2 FILTER UNIT.

TEST CONDITIONS

Frequency selector	: 1A (f = 2.0005 MHz)
Mode	: A3J
KEY	: ON
Oscilloscope input	: Passive probe 10 Mohm/11pF
DC voltmeter input	: 10 Mohm

⊙ : Diode probe measurements

TP : Testpoints

All voltage statements are typical

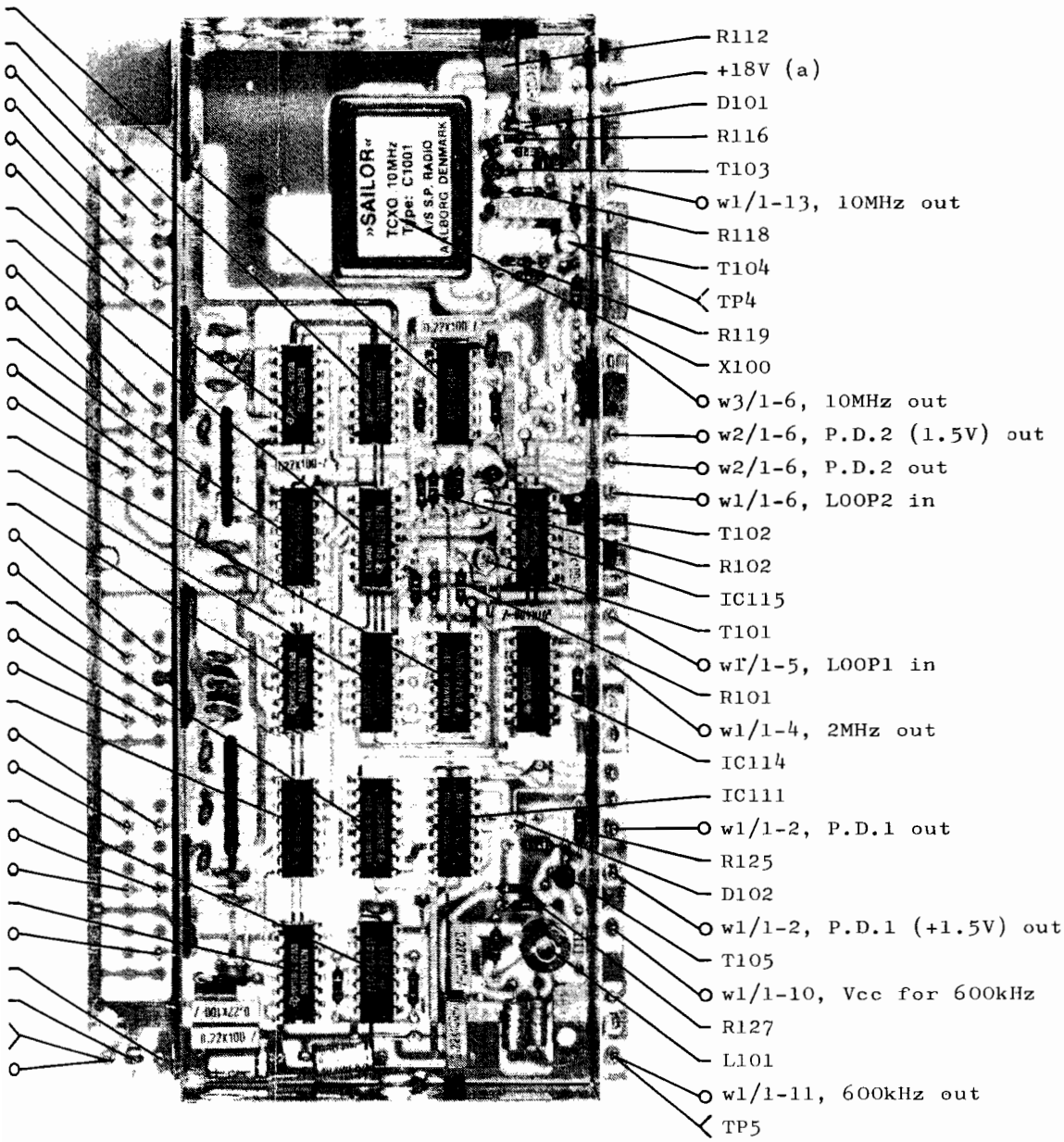

Wire numbers in brackets : S1300, S1301 only.
Module 800 only in S1300, S1300T, S1300TT and S1302
Module 2100 only in S1301, S1303 and S1304

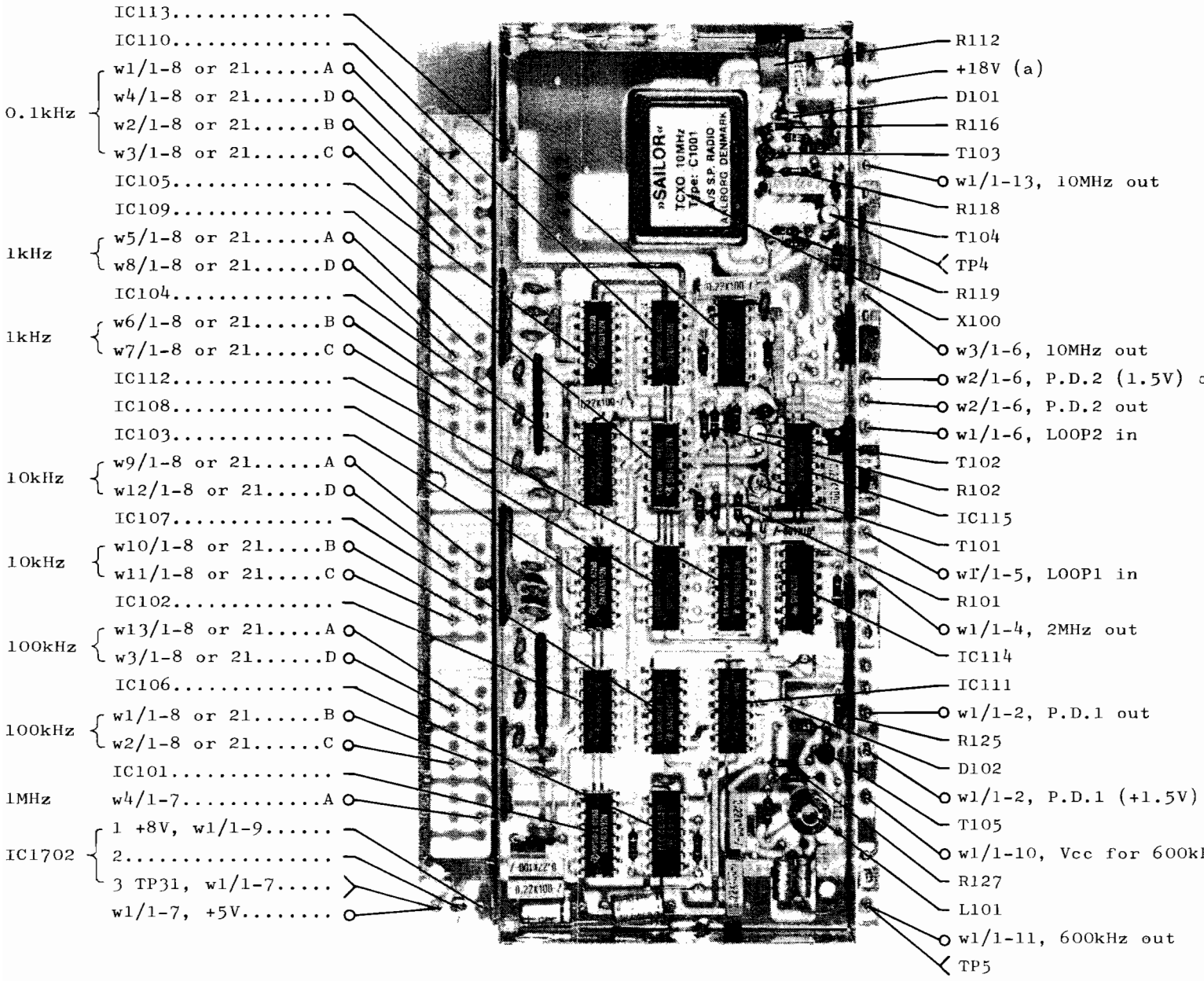

Wire numbers in brackets : S1300, S1301 only.
Module 800 only in S1300, S1300T, S1300TT and S1302
Module 2100 only in S1301, S1303 and S1304

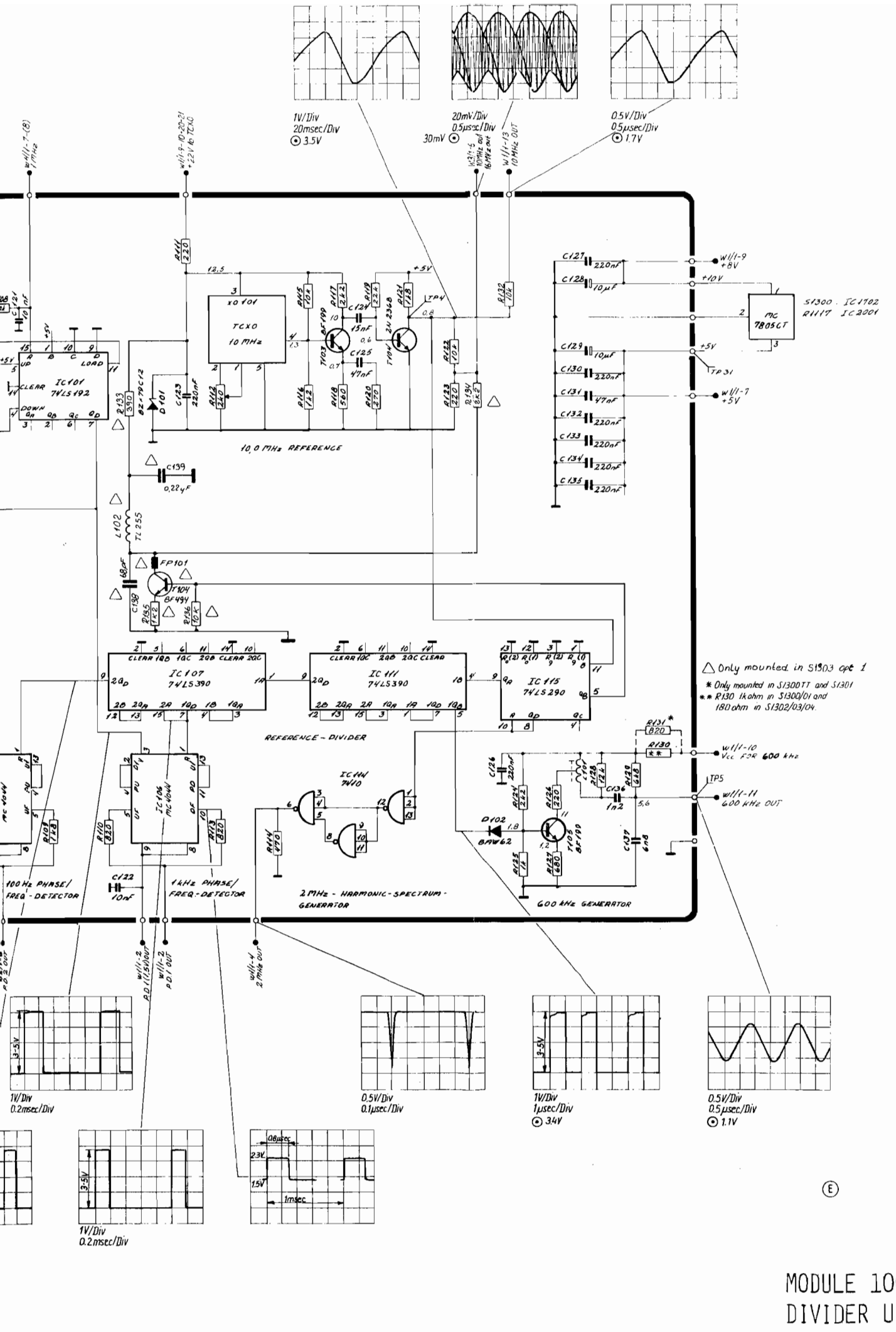

MODULE 100
DIVIDER UNIT

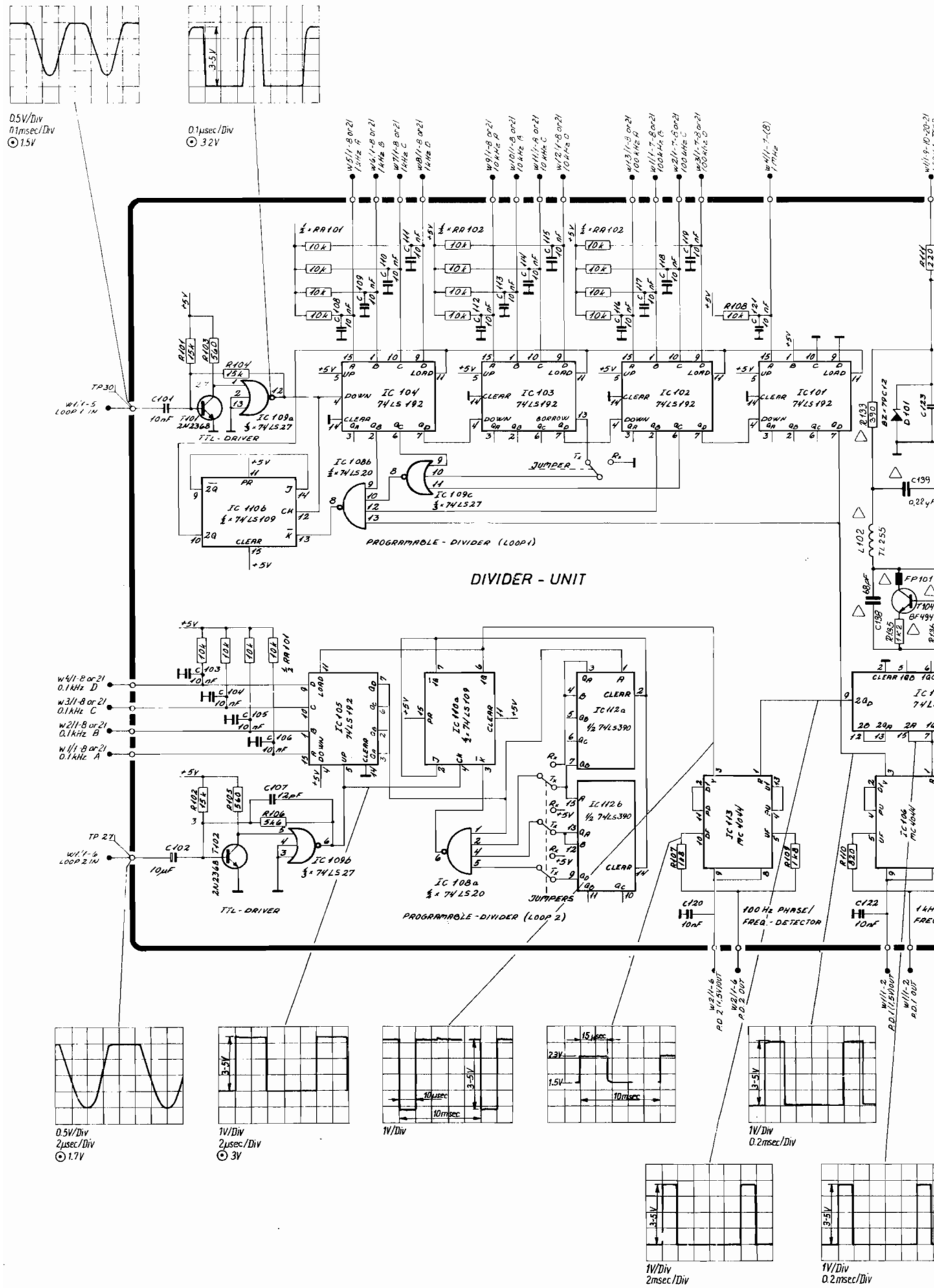
DIVIDER - UNIT
PROGRAMMABLE - DIVIDER (LOOP 1)
PROGRAMMABLE - DIVIDER (LOOP 2)
TTL - DRIVER
TTL - DRIVER
JUMPER
JUMPERS
100 Hz PHASE/ FREQ. - DETECTOR
IC 104 74LS192
IC 103 74LS192
IC 102 74LS192
IC 101 74LS192
IC 105 74LS192
IC 106 74LS109
IC 108a ½ 74LS20
IC 108b ½ 74LS20
IC 108c ½ 74LS27
IC 109a ½ 74LS27
IC 109b ½ 74LS27
IC 110a ½ 74LS109
IC 112a ½ 74LS390
IC 112b ½ 74LS390
IC 113 MC 4044
IC 114 MC 4044
TP 30
TP 27
W1/1-5 LOOP 1 IN
W1/1-4 LOOP 2 IN
W4/1-8 or 21 0.1 kHz D
W3/1-8 or 21 0.1 kHz C
W2/1-8 or 21 0.1 kHz B
W1/1-8 or 21 0.1 kHz A
W2/1-6 PD 2 (1.5V) OUT
W2/1-6 PD 2 OUT
W1/1-2 PD 1 (1.5V) OUT
W1/1-2 PD 1 OUT
0.5V/Div 0.1msec/Div ⊙ 1.5V
0.1µsec/Div ⊙ 3.2V
0.5V/Div 2µsec/Div ⊙ 1.7V
1V/Div 2µsec/Div ⊙ 3V
1V/Div
1V/Div 0.2msec/Div
1V/Div 2msec/Div
1V/Div 0.2msec/Div

CIRCUIT DESCRIPTION LOOP 1 FILTER & ±18V SUPPLY UNIT S130X

This unit contains two regulated power supplies ±18V with fold-back current limiter, the complete integrator and filter for LOOP 1.

-18V SUPPLY

The series transistor T201 supplies a -18V output controlled by the current flow into its base from T205, where a portion of the output voltage, via a voltage divider containing R209, is compared to a reference voltage created by R204, D202 and D201. The fold-back is within the circuit. When the output current from the regulator increases the base current must increase too, but this current is limited by R204. When the regulator reaches this limit T205 stops conducting and so it folds back. To ensure that T201 starts conducting R203 is added.

+18V SUPPLY

The principle of operation for this regulator is exactly as described above, with an additional current limiter containing T204 and T206 to ensure the fold-back characteristic is maintained within design limits. To ensure start-up R212 is added.

INTEGRATOR & LOOP 1 FILTER

The integrator is built-up around IC202, the integration capacitor is C211. R220 feeds current into the diode coupled Darlington pair in the phase comparator MC4044 on the divider board to perform the 1.5V reference. Output from the integrator pin 6 on IC202 feeds into the active low-pass filter IC201 to filter out the 1 kHz ripple from the phase comparator. The voltage divider R217 and R218 connected to IC202 via D206 ensure that the output voltage swing is within approx. -4V to -17V.

TEST CONDITIONS

Frequency selector ..... : 1A (f = 2.0005 MHz)
Oscilloscope input ..... : Passive probe 10 Mohm/11 pF
DC voltmeter input ..... : 10 Mohm

⊙ : Diode probe measurements

TP: Testpoints
All voltage statements are typical

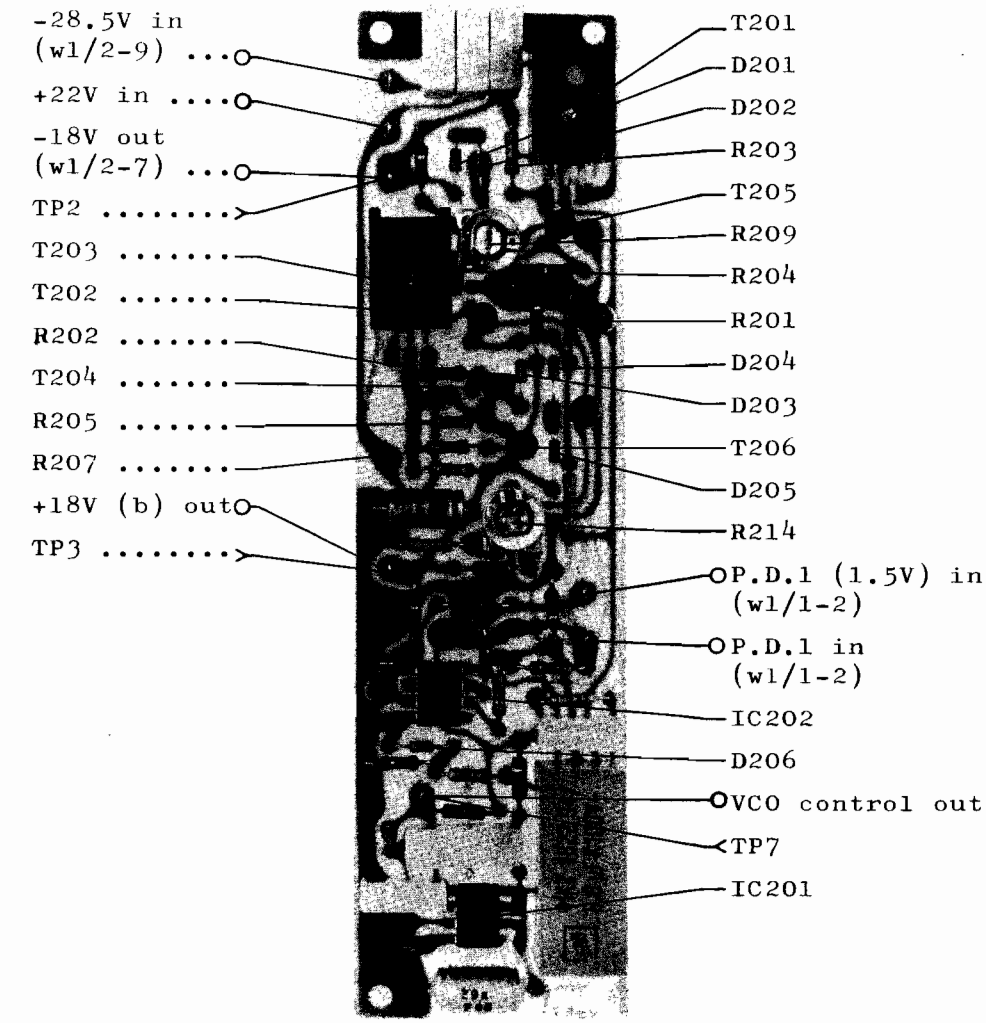

	S130X	R11XX S130XA	
R203	270kΩ	150kΩ	R1104
R211	15 Ω	10Ω	R1108

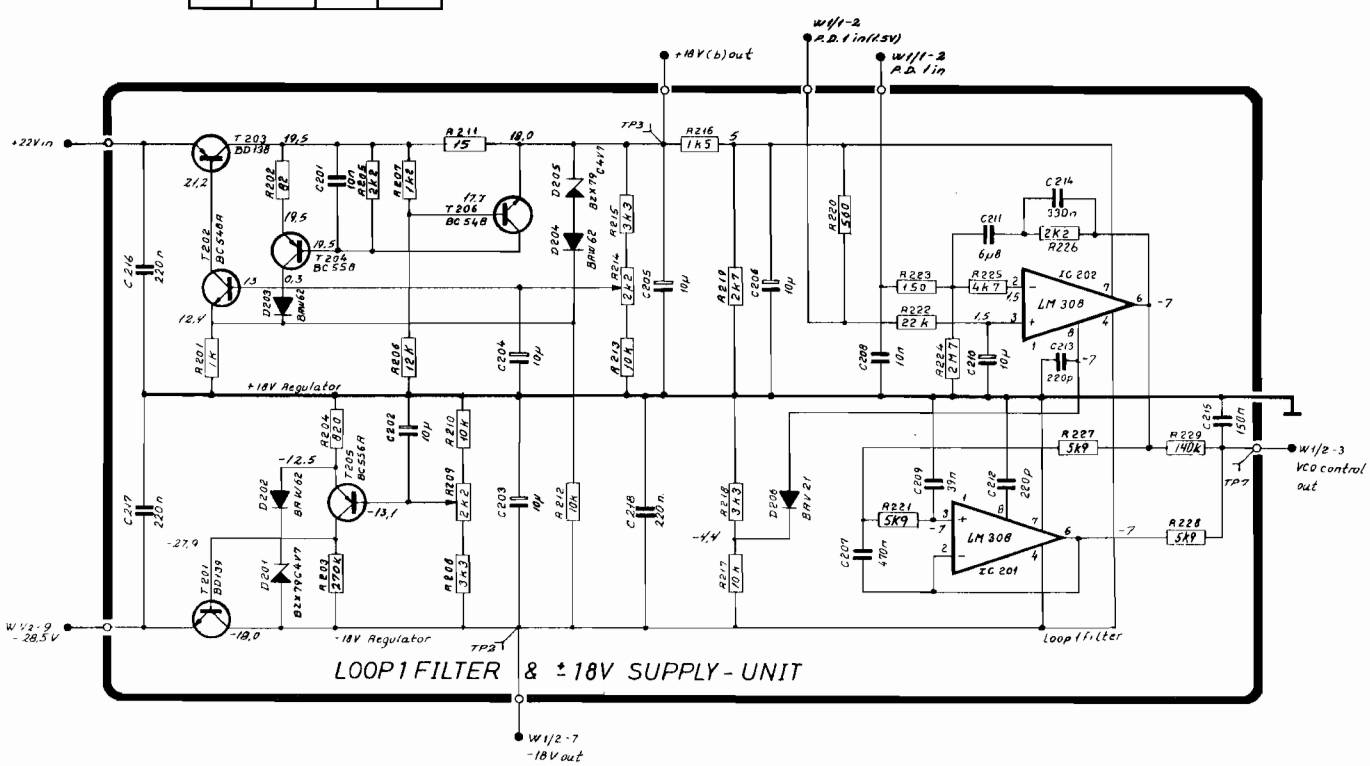

MODULE 200
LOOP 1 FILTER & +- 18V SUPPLY

CIRCUIT DESCRIPTION FOR VCO-UNIT S13XX

The VCO-unit comprises a common active negative resistance transistor-circuit and 9 parallel tuned circuits, which can be connected to the first mentioned circuit - one at a time - by means of diode switches. The negative resistance is generated by means of the feed-back around T301 and T302. When a parallel tuned circuit is connected to the collector of T301 by means of a pair of band switching diodes D326 to D334 and D338 to D340, the circuit will oscillate. Each coil section will cover an output frequency range of 2 MHz.

The frequency of oscillation can be varied by means of the VCO-control input via the appropriate variocap. diode D302 to D310. The appropriate coil L304 to L315 is adjusted to give the maximum output frequency in the selected 2 MHz band for a control voltage of ±15V. When the output frequency is varied 2.0 MHz for each coil section the control voltage will change about 6 to 9.5 Volts.

The AC amplitude level at the tuned circuit and also at the buffer output port is kept constant by means of an ALC-circuit. The output level is sensed at R314 by the level detector C311, R316, and D301. Via T303 and R301 the DC-current and so the gain in T301 are regulated to give a constant output amplitude from the buffer amplifier built around T304. The DC-level at the collector of T303 will be able to vary between about 4.5V and 10.5V over the entire frequency range. The output level will be about $1.4V_{pp}$ at C312 and about 50 mV_{pp} at the top of R319.

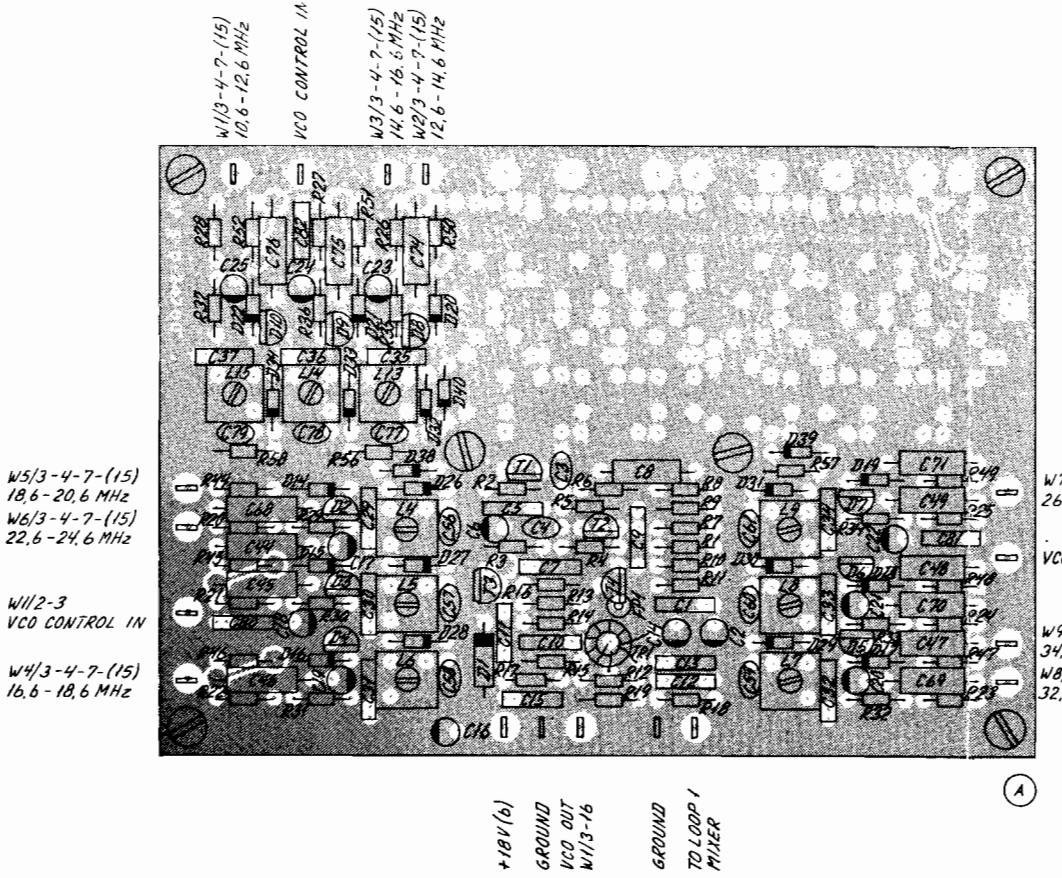

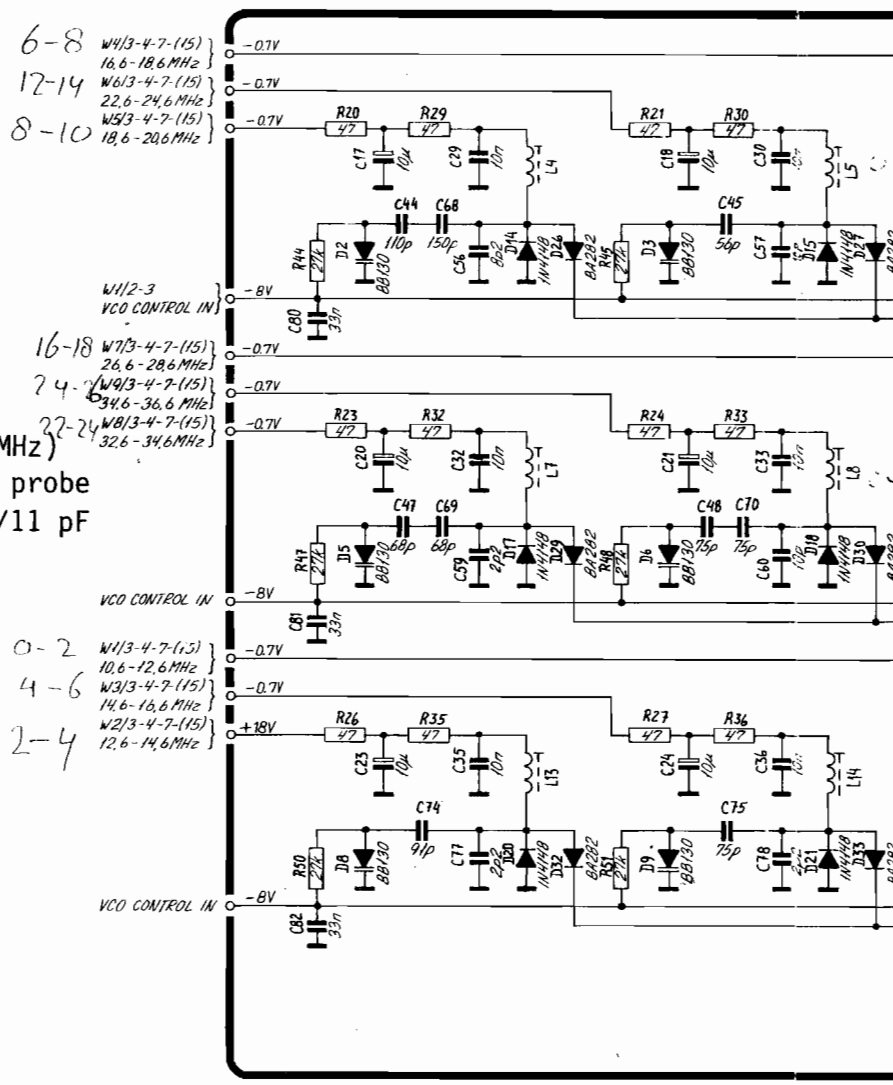

TEST CONDITIONS

Frequency selector ..... : 1A (f = 2.0005 MHz)

Oscilloscope input ..... : Passive probe 10 Mohm/11 pF

DC voltmeter input ..... : 10 Mohm

⊙ : Diode probe measurements

TP: Testpoints
All voltage statements are typical

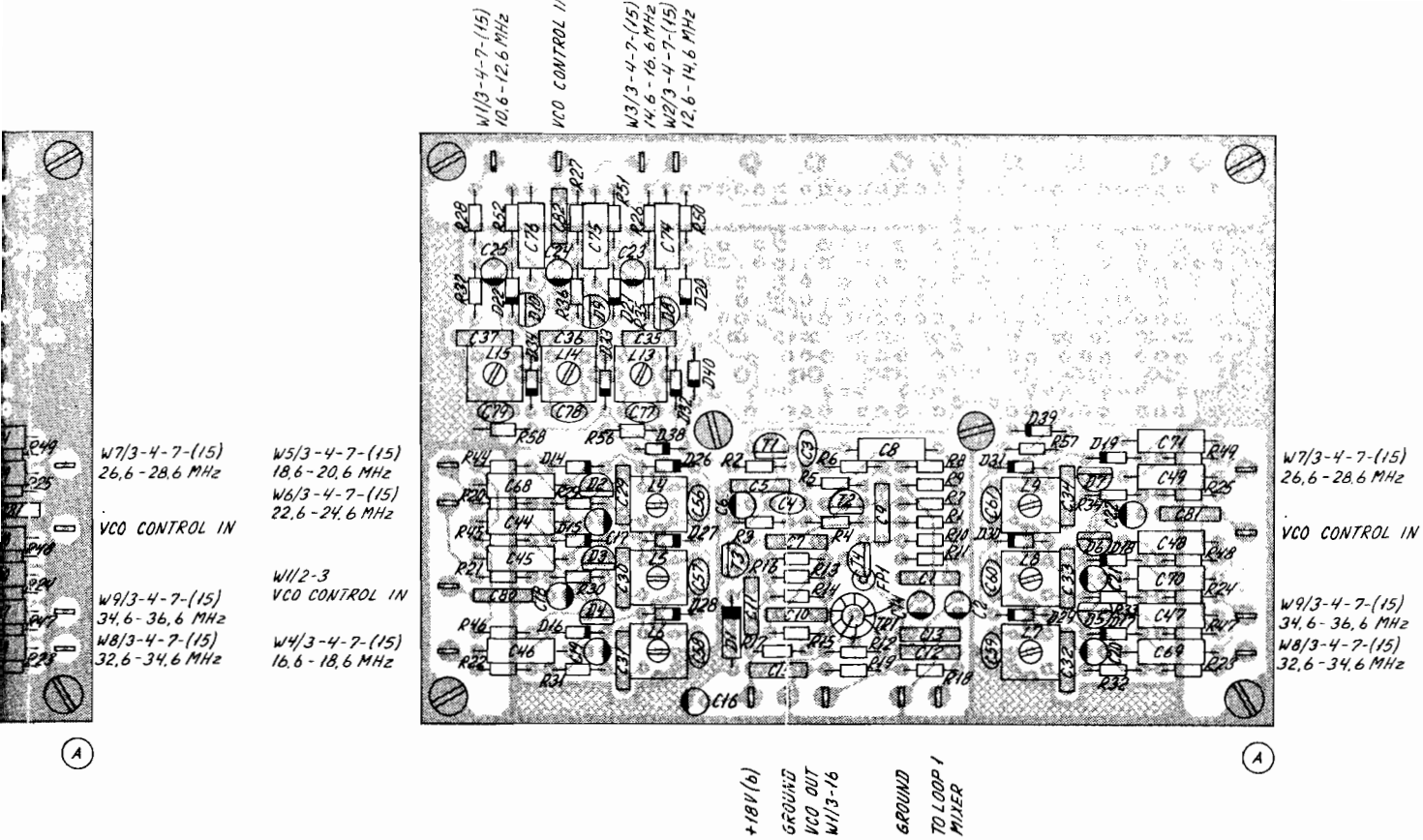

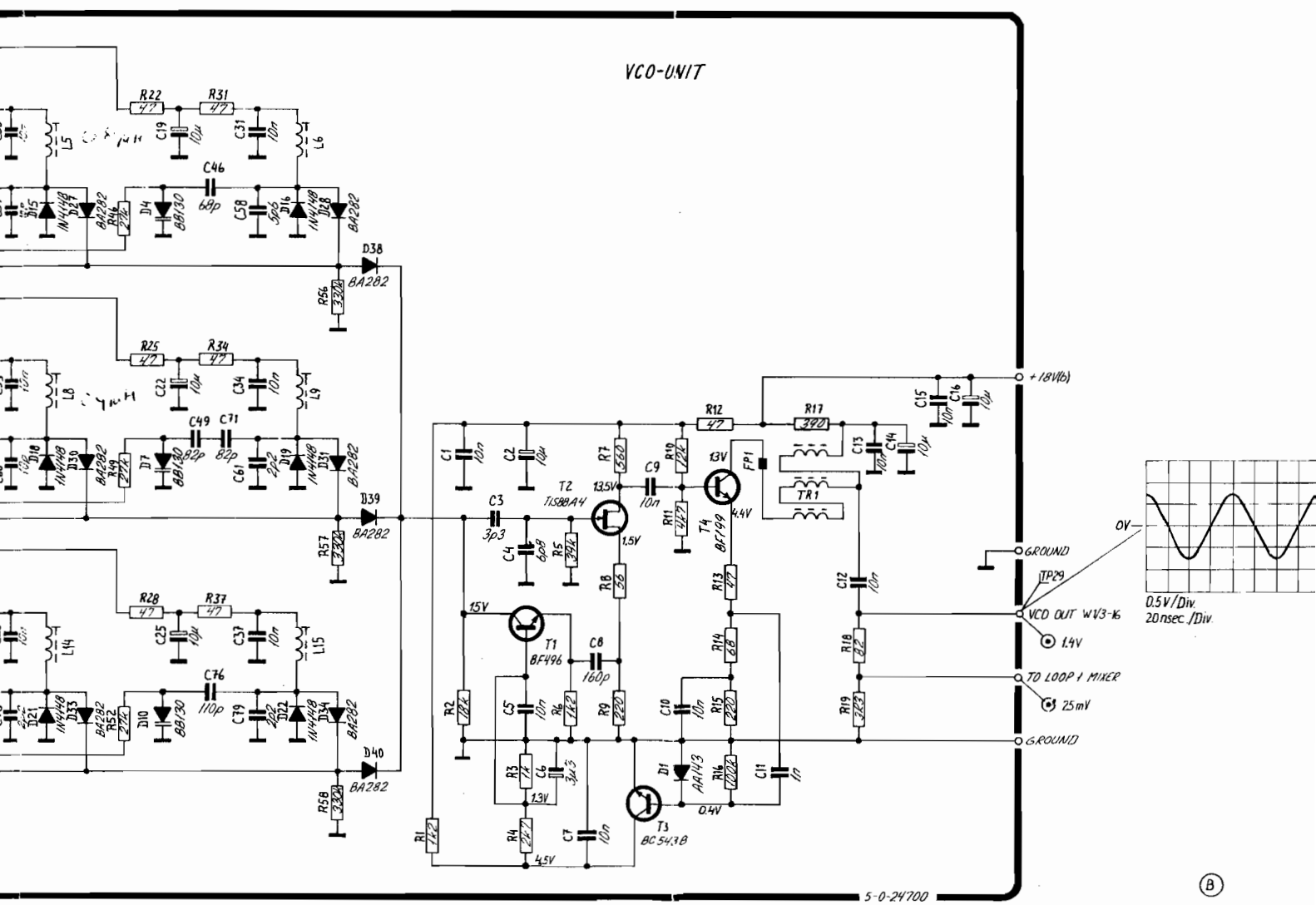

VCO UNIT (MODULE 300)

CIRCUIT DESCRIPTION VCXO & LOOP 2 FILTER S130X

This unit contains the integrator and loop filter for loop 2, the voltage controlled crystal oscillator (VCXO) and the loop 2 mixer.

LOOP 2 FILTER

The integrator is built up around IC601 the integration capacitor is C605. R601 feeds current into the diode coupled Darlington pair in the phase comparator MC4044 on the divider board to make the 1.5V reference. Output from the integrator pin 6 on IC601 is fed into the low-pass filters R607, C607, R609 and C606 to filter out the 100 Hz ripple from the phase comparator. From the low-pass filter the control voltage is fed via R615 into the VCXO.

VCXO

The VCXO is built up around the FET T601. The oscillator is an ordinary Hartley oscillator with a crystal in the feed-back path. The crystal is tuned with the varicaps D601 and D602 to carry out the voltage control of the frequency. The output from the VCXO to first mixer is taken from the tap on the coil L601. From the source a portion of the oscillator signal is taken to the loop 2 mixer.

LOOP 2 MIXER

As mentioned above the VCXO signal is fed into the base of mixer transistor T602 via R610. 10 MHz from the TCXO are applied to the same base via R619. Because of the big difference between the two oscillator frequencies and the wanted output frequency the only filtering needed to filter out the wanted frequency product is R621 and C616. The mixer transistor feeds into the output amplifier T603.

TEST CONDITIONS

Frequency selector ..... : 1A (f = 2.0005 MHz)
Oscilloscope input ..... : Passive probe 10 Mohm/11 pF
DC voltmeter input ..... : 10 Mohm

⊙ : Diode probe measurements

TP: Testpoints
All voltage statements are typical

4-0-22093/4-0-22014

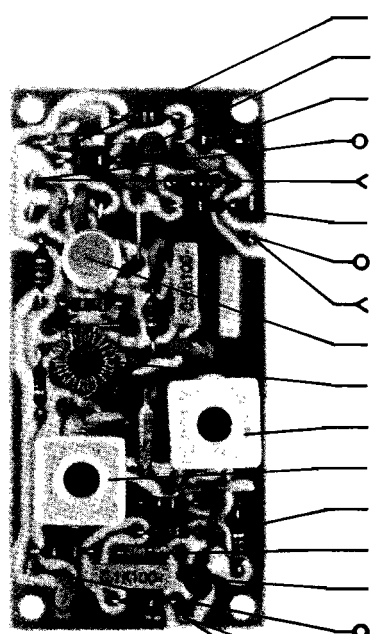

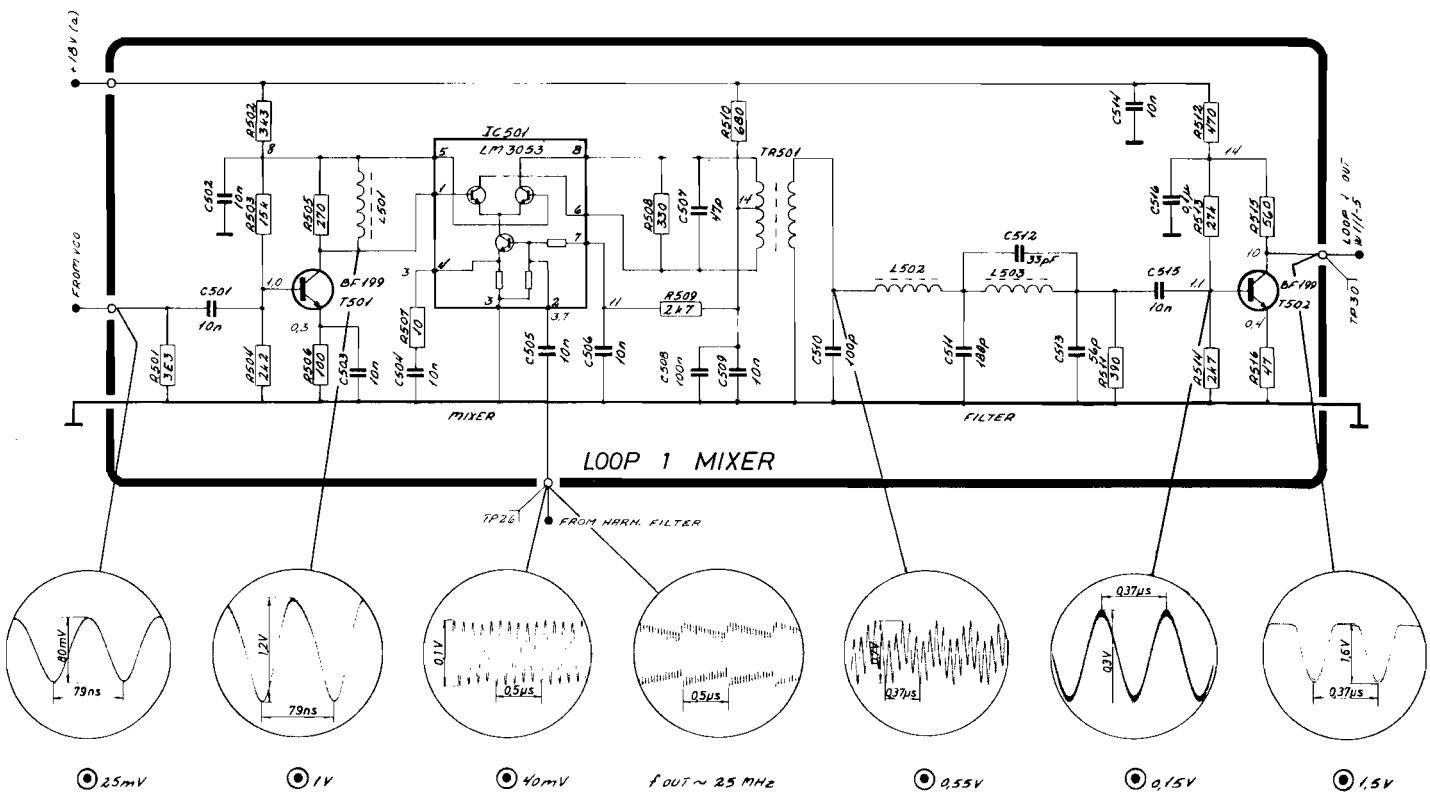

CONDITIONS

uency selector : 1A (f = 2.0005 MHz)

lloscope input : passive probe 10 Mohm//11 pF

oltmeter input : 10 Mohm

Diode probe measurements

Testpoints

voltage are typical

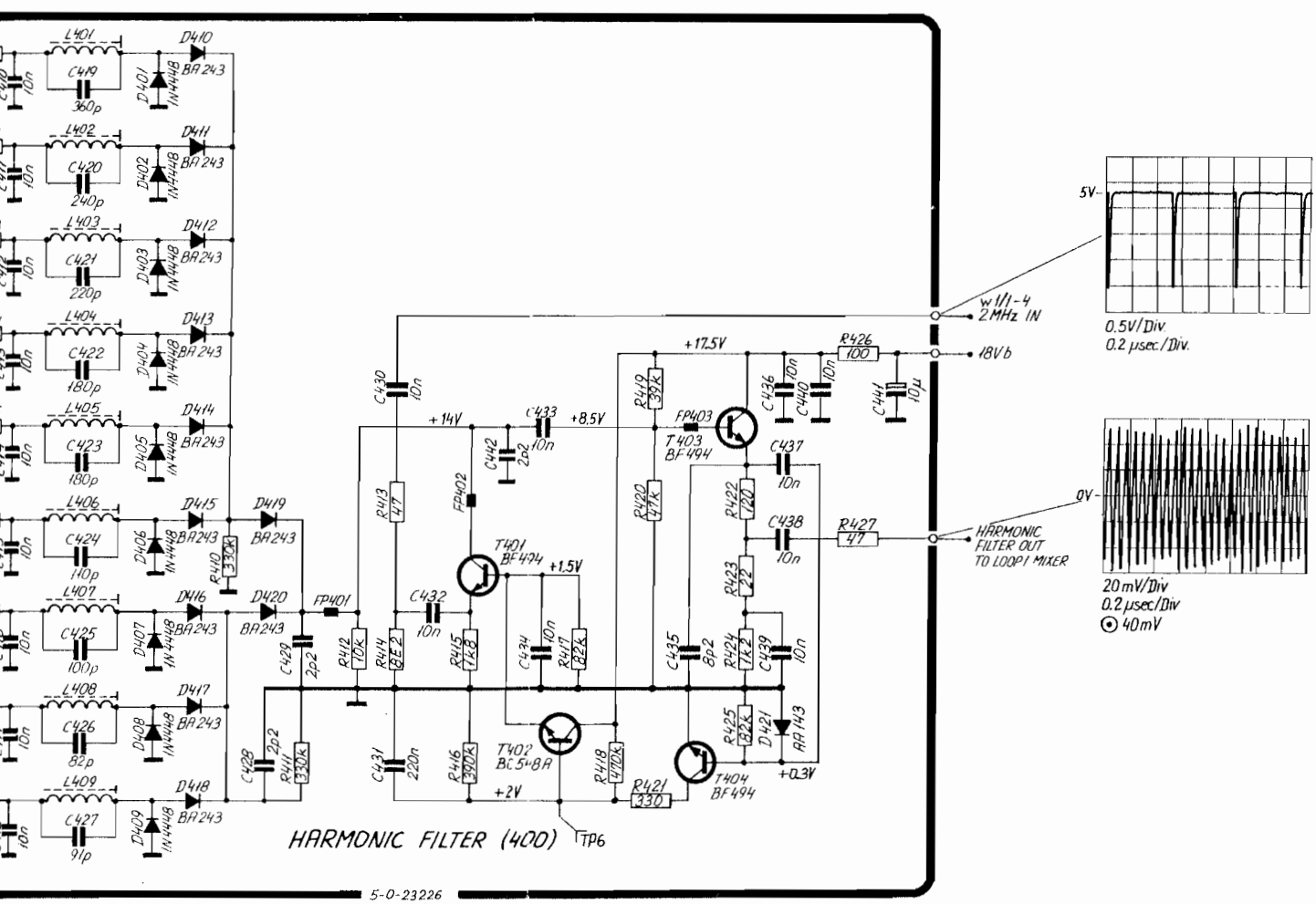

ts which are switched in and out
gain controlled amplifier.

spectrum generator located on
cuit together with T401 filters
ne input signal. The collector
follower T403.

is detected by D421, T404 and C437.
e AGC-voltage is generated via T402
maintain constant output voltage

TEST CONDITIONS

Frequency selector : 1A (f = 2.0005
Oscilloscope input : passive probe
DC voltmeter input : 10 Mohm
⊙ : Diode probe measurements
TP : Testpoints
All voltage are typical

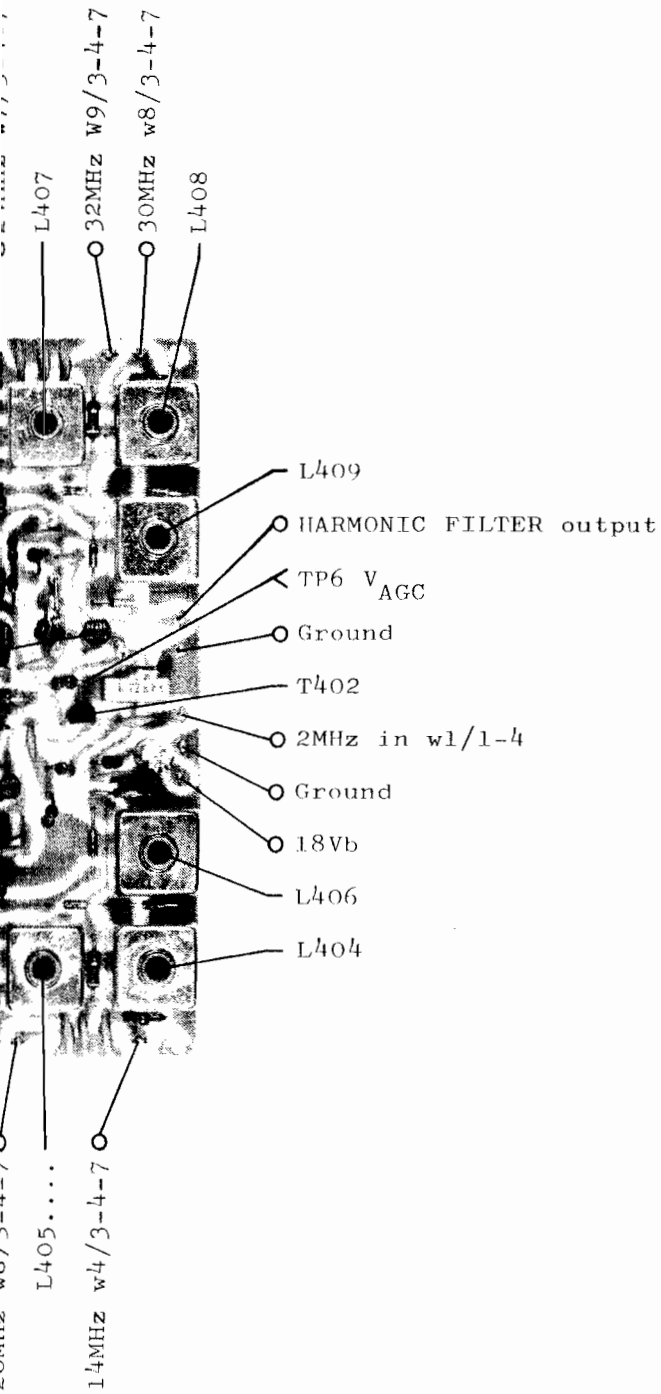

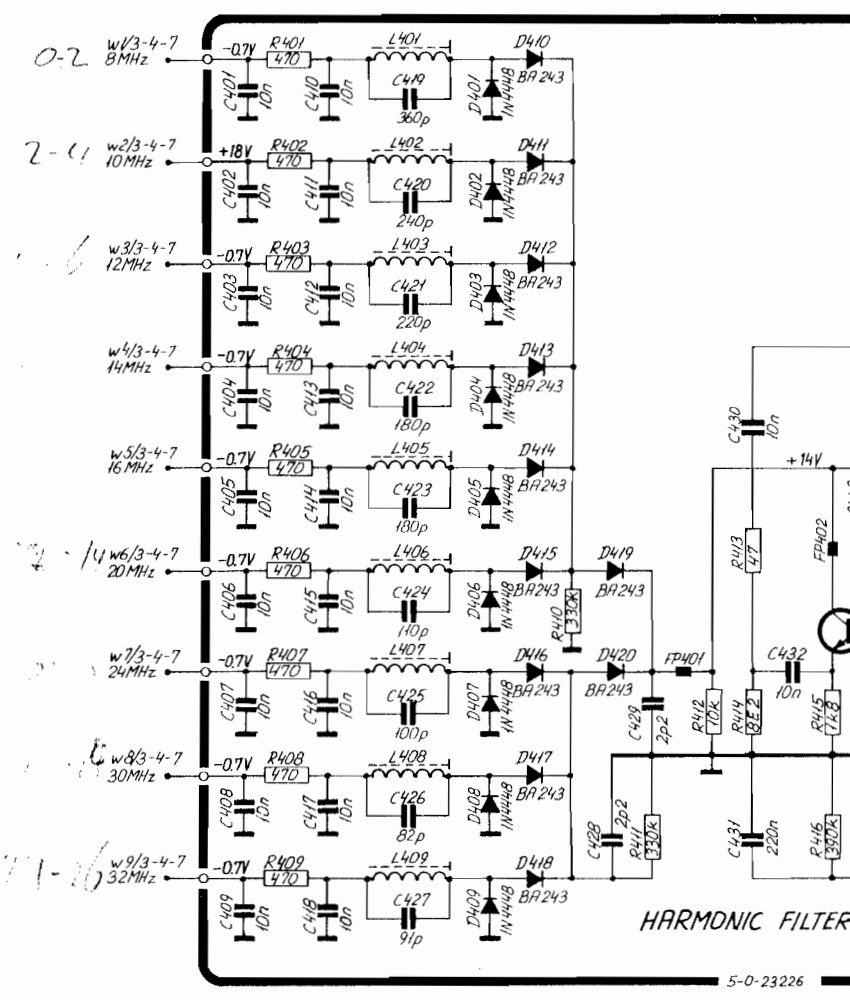

CIRCUIT DESCRIPTION HARMONIC FILTERS S130X

This unit consists of nine tuned LC-circuits which are switched in and out by the diodes D410-D420, and an automatic gain controlled amplifier.

The circuit receives signal fron the 2 MHz spectrum generator located on the divider board, and the selected LC-circuit together with T401 filters out and amplifies the wanted harmonic of the input signal. The collector signal of T401 is then fed to the emitter follower T403.

The output voltage of the emitter follower is detected by D421, T404 and C437. Through T404, R416, R418, R421 and C431 the AGC-voltage is generated via T402 this voltage regulates the gain in T401 to maintain constant output voltage of the filter.

C1/1 S130X
4-6-23226, 4-0-23226C

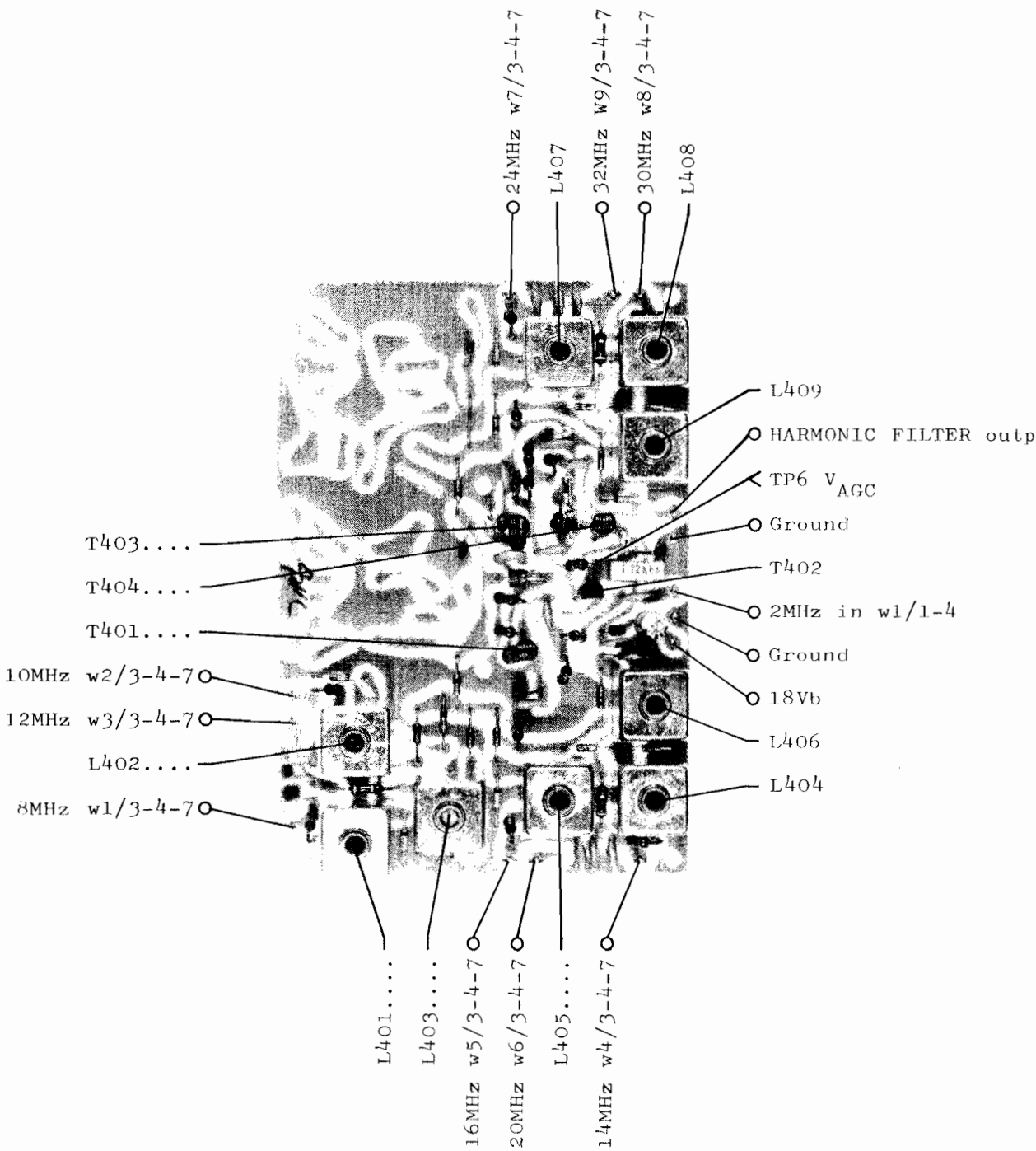

CIRCUIT DESCRIPTION LOOP 1 MIXER S130X

This unit mixes together the VCO signal and the signal from the harmonic filter and filters out the difference frequency to supply the variable divider.

The VCO signal is fed to the top of R501 which is part of a voltage divider. From here it is fed into a buffer amplifier T501 and after that to the integrated balanced mixer IC501. To this the harmonic filter signal is applied via C505. Output from the mixer is fed into the combiner transformer TR501 feeding into the low-pass filter containing L502 and L503. This low-pass filter filters out the wanted mixing product and prevents the two local-oscillator signals from reaching the variable divider. The filtered signal is amplified in the output amplifier T502.

TEST CONDITIONS

Frequency selector : 1A (f = 2.0005 MHz)

Oscilloscope input : Passive probe 10 Mohm//11 pF

DC voltmeter input : 10 Mohm

⊙ : Diode probe measurements

TP : Testpoints

All voltage statements are typical

CIRCUIT DESCRIPTION LOOP 1 MIXER S130X

This unit mixes together the VCO signal and the signal from the harmonic filter and filters out the difference frequency to supply the variable divider.

The VCO signal is fed to the top of R501 which is part of a voltage divider. From here it is fed into a buffer amplifier T501 and after that to the integrated balanced mixer IC501. To this the harmonic filter signal is applied via C505. Output from the mixer is fed into the combiner transformer TR501 feeding into the low-pass filter containing L502 and L503. This low-pass filter filters out the wanted mixing product and prevents the two local-oscillator signals from reaching the variable divider. The filtered signal is amplified in the output amplifier T502.

TEST CONDITIONS

Frequency selector : 1A (f = 2.0005 MHz)

Oscilloscope input : Passive probe 10 Mohm//11 pF

DC voltmeter input : 10 Mohm

⊙ : Diode probe measurements

TP : Testpoints

All voltage statements are typical

B 1/2 S 130X

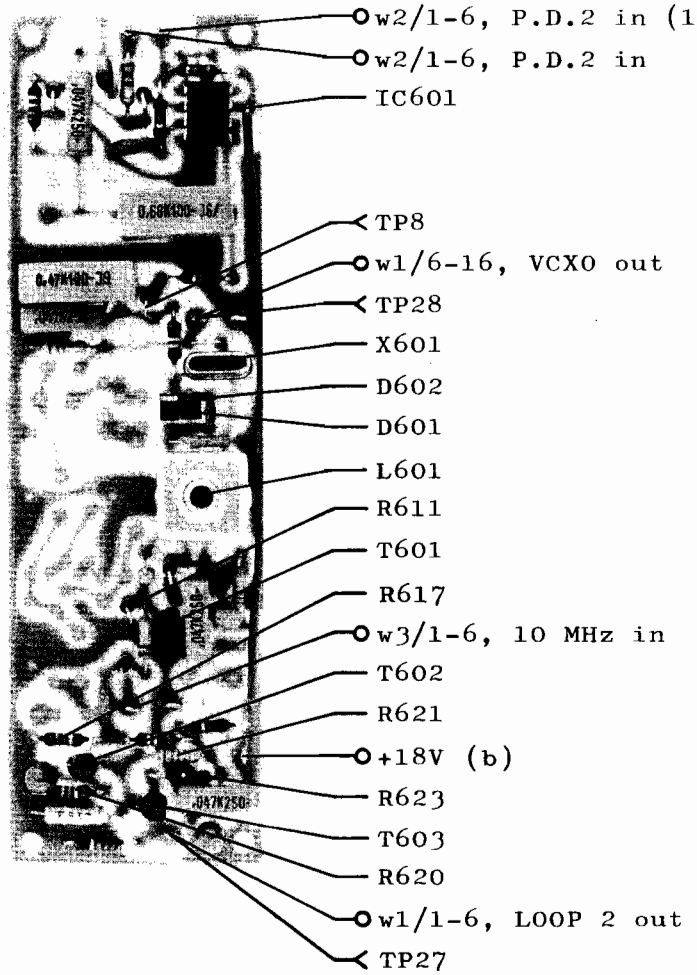

4-0-22096/4-0-22020

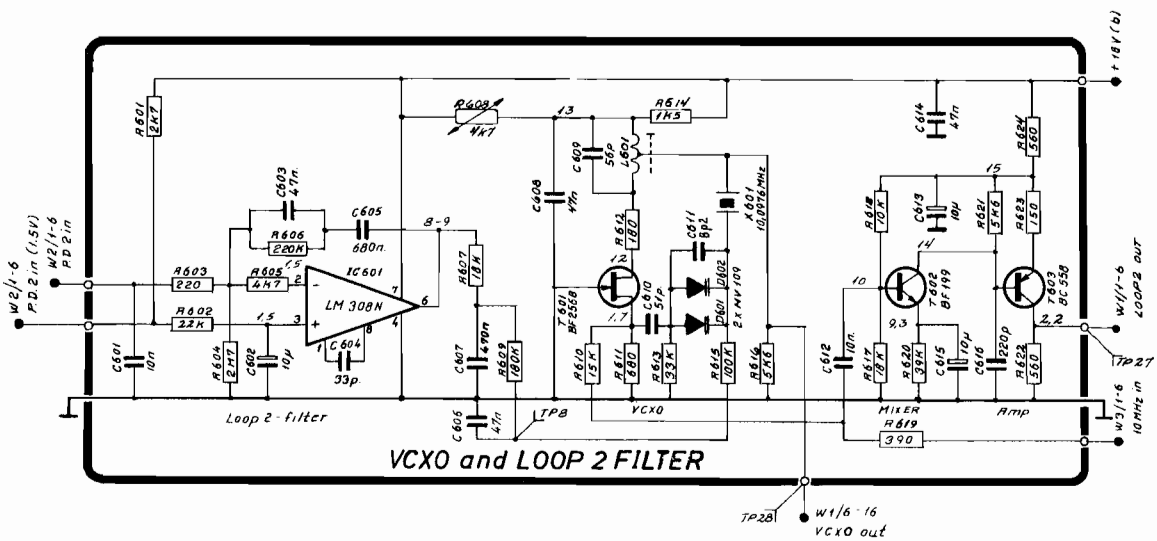

CIRCUIT DESCRIPTION VCO SELECTOR S130X

This unit has a five bit code input (T,V,X,Y,Z) and according to this information it will select the proper VCO and band filter. The five bit code addresses a prom IC702 which contains the code for VCO, band filter, and 1 MHzA information corresponding to every band. IC704 is a 3 to 8 line decoder which controlled from the prom IC702 turns one of the outputs low. This output selects via a buffer and a driver transistor the band filter in question.

The VCO code is from the prom IC702 fed to a 4 to 16 line decoder via a level shifter formed by IC701, R33-36, D707-D710, R739-R742 and T705 with surrounding components. Controlled by the code of the inputs ABCD IC703 turns low an output and via a driver transistor selects a VCO.

T703 and T704 detect whether the frequency is below 4 MHz or not. T702 and the diodes D702-D705 indicate when the band code for 2182 kHz fixed is at the inputs T,V,X,Y,Z.

T701 turns low the Y bit in the five bit code if dummy load is selected below 4 MHz. This results in a blocking of the band 2.0 - 2.199 MHz as it has the band code (TVXYZ) 00010. The band code is turned in the code 00000 and if the operator tries to transmit into the dummy-load in the frequency band 2.0 - 2.199 MHz, the PA stage will prevent transmission because it will not accept the code 00000.

Programming Table for IC702

Carrier Frequencies kHz		OUTPUT		
	ZYXVT	1 MHz BAND A CODE 8765	VCO CODE 4321	HEX
1600.0 to 1799.9	10110	1000	0000	80
1800.0 to 1999.9	10001	1000	0000	80
2000.0 to 2199.9	01000	0000	0001	01
2200.0 to 2399.9	00001	0000	0001	01
2400.0 to 2599.9	00011	0000	0001	01
2600.0 to 2799.9	00100	0000	0001	01
2800.0 to 2999.9	00101	0000	0001	01
3000.0 to 3099.9	10010	1000	0001	81
3100.0 to 3399.9	10011	1000	0001	81
3400.0 to 3699.9	10100	1000	0001	81
3700.0 to 3999.9	10101	1000	0001	81
4000.0 to 4299.9	00110	0000	0010	02
4300.0 to 4599.9	00111	0000	0010	02
4600.0 to 4999.9	00010	0000	0010	02
5000.0 to 5499.9	11011	1000	0010	82
5500.0 to 5999.9	10111	1000	0010	82
6000.0 to 6399.9	01001	0000	1101	0D
6400.0 to 6999.9	01010	0001	1101	1D
7000.0 to 7599.9	11000	1001	1101	9D
7600.0 to 7999.9	11001	1001	1101	9D
8000.0 to 8499.9	01011	0001	0011	13
12300.0 to 12699.9	01100	0010	0100	24
16400.0 to 16899.9	01101	0011	1100	3C
22000.0 to 22399.9	01110	0100	0101	45
25000.0 to 25199.9	11010	1101	1110	DE
2182 kHz	10000	0000	1111	0F
Extra	01111			
Extra	11100			
Extra	11101			
Extra	11110			
Block	00000			
Block	11111			

ADDRESS ZYXVT	OUTPUT
00000	10
00001	01
00010	02
00011	01
00100	01
00101	01
00110	02
00111	02
01000	01
01001	0D
01010	1D
01011	13
01100	24
01101	3C
01110	45
01111	FF
10000	0F
10001	80
10010	81
10011	81
10100	81
10101	81
10110	80
10111	82
11000	9D
11001	9D
11010	DE
11011	82
11100	FF
11101	FF
11110	FF
11111	1A

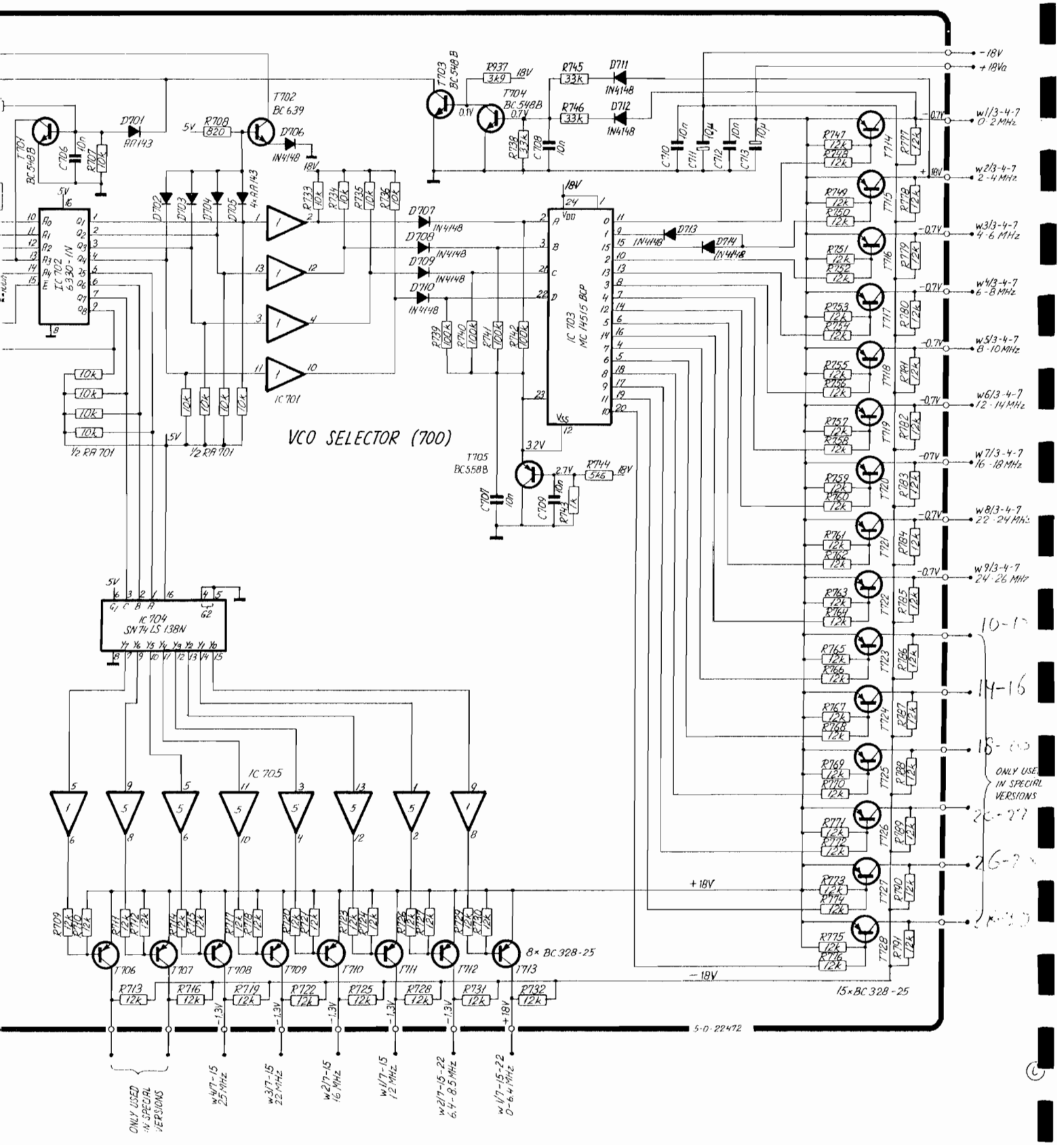
VCO SELECTOR (700)
IC 702 6330-1N
IC 703 MC 14515 BCP
IC 704 SN74 LS 138N
IC 705
IC 701
T701 BC 548B
T702 BC 639
T703 BC 548B
T704 BC 548B
T705 BC 558B
D701 AA143
D706 1N4148
D707 1N4148
D708 1N4148
D709 1N4148
D710 1N4148
D711 1N4148
D712 1N4148
D713 1N4148
D714 1N4148
R937 3k9
R745 33k
R746 33k
R744 5k6
R708 820
R733 10k
R734 10k
R735 10k
R736 10k
R739 100k
R740 100k
R741 100k
R742 100k
R743 1k
C706 10n
C707 10n
C708 10n
C709 10n
C710 10n
C711 10µ
C712 10n
C713 10µ
R707 10k
R709 12k
R710 12k
R711 12k
R712 12k
R713 12k
R714 12k
R715 12k
R716 12k
R717 12k
R718 12k
R719 12k
R720 12k
R721 12k
R722 12k
R723 12k
R724 12k
R725 12k
R726 12k
R727 12k
R728 12k
R729 12k
R730 12k
R731 12k
R732 12k
R733 10k
R734 10k
R735 10k
R736 10k
R737 3k9
R738 33k
R739 100k
R740 100k
R741 100k
R742 100k
R743 1k
R744 5k6
R745 33k
R746 33k
R747 12k
R748 12k
R749 12k
R750 12k
R751 12k
R752 12k
R753 12k
R754 12k
R755 12k
R756 12k
R757 12k
R758 12k
R759 12k
R760 12k
R761 12k
R762 12k
R763 12k
R764 12k
R765 12k
R766 12k
R767 12k
R768 12k
R769 12k
R770 12k
R771 12k
R772 12k
R773 12k
R774 12k
R775 12k
R776 12k
R777 12k
R778 12k
R779 12k
R780 12k
R781 12k
R782 12k
R783 12k
R784 12k
R785 12k
R786 12k
R787 12k
R788 12k
R789 12k
R790 12k
R791 12k
T706
T707
T708
T709
T710
T711
T712
T713
T714
T715
T716
T717
T718
T719
T720
T721
T722
T723
T724
T725
T726
T727
T728
8× BC 328-25
15× BC 328-25
5-0-22472
-18V
+18Va
w1/3-4-7 0-2 MHz
w2/3-4-7 2-4 MHz
w3/3-4-7 4-6 MHz
w4/3-4-7 6-8 MHz
w5/3-4-7 8-10 MHz
w6/3-4-7 12-14 MHz
w7/3-4-7 16-18 MHz
w8/3-4-7 22-24 MHz
w9/3-4-7 24-26 MHz
ONLY USED IN SPECIAL VERSIONS
w4/7-15 25 MHz
w3/7-15 22 MHz
w2/7-15 16 MHz
w1/7-15 12 MHz
w2/7-15-22 6.4-8.5 MHz
w1/7-15-22 0-6.4 MHz

5 MHz)
10 Móhm/11 pF

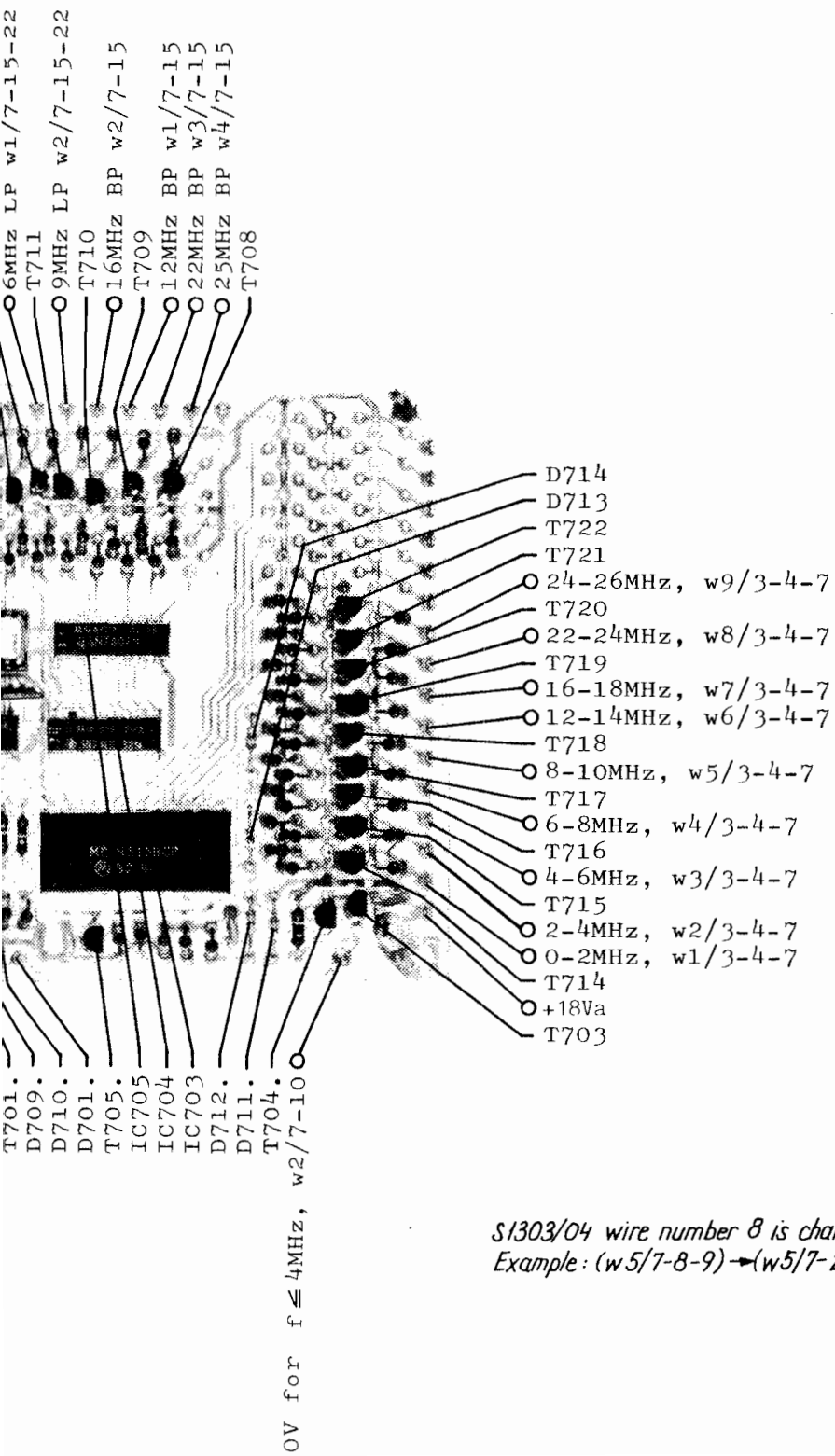

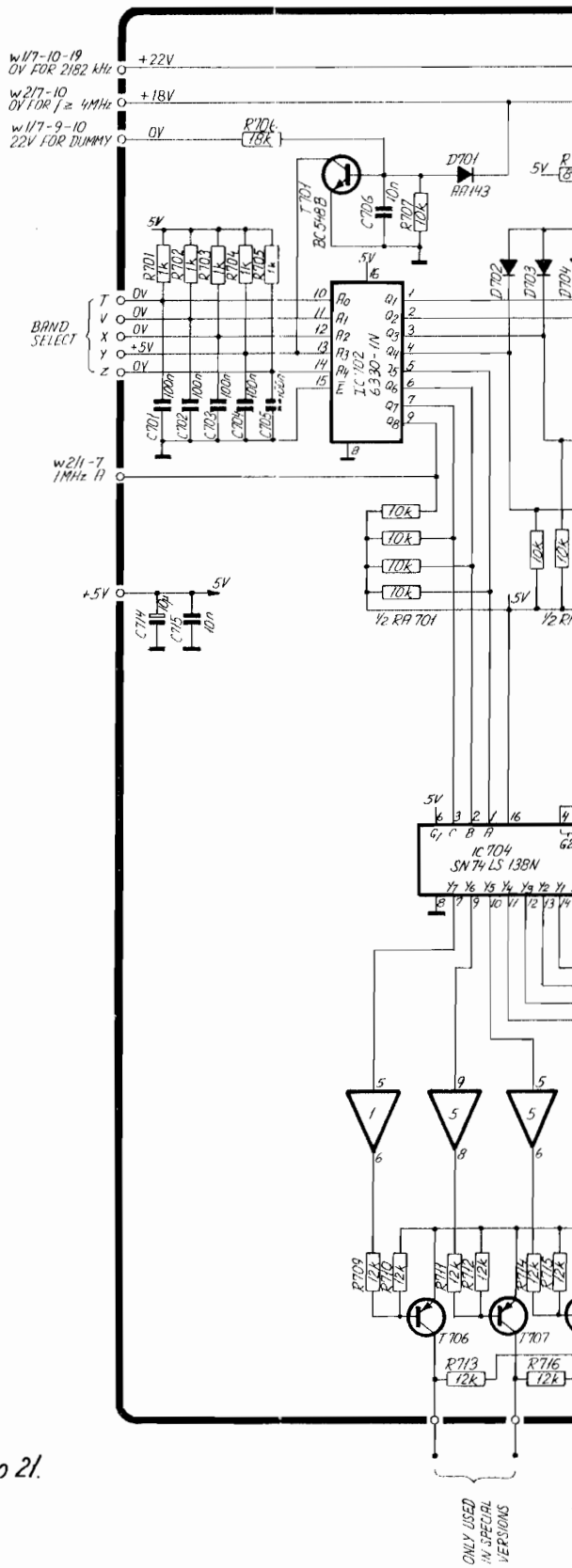

S1303/04 wire number 8 is changed to 21.
Example: (w5/7-8-9) → (w5/7-21-9)

C2/2 S1302/03/04
4-6-22472A 4-0-22472C

TEST CONDITIONS

Frequency selector .. .. : 1A (f = 2.0005 MHz)
Oscilloscope input .. .. : Passive probe 10 Mohm/11 pF
DC voltmeter input ..... : 10 Mohm

⊙ : Diode probe measurements

TP: Testpoints
All voltage statement are typical

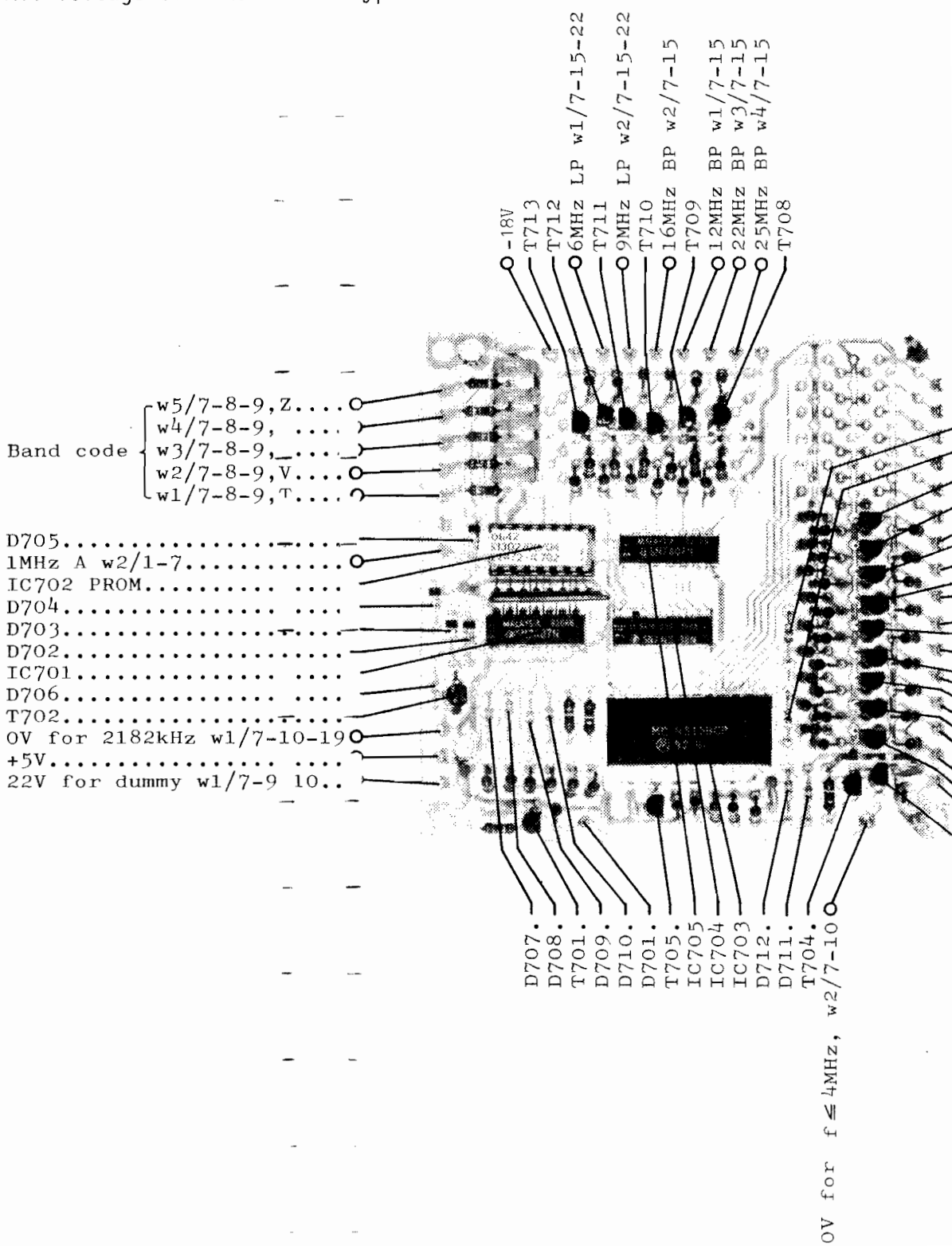

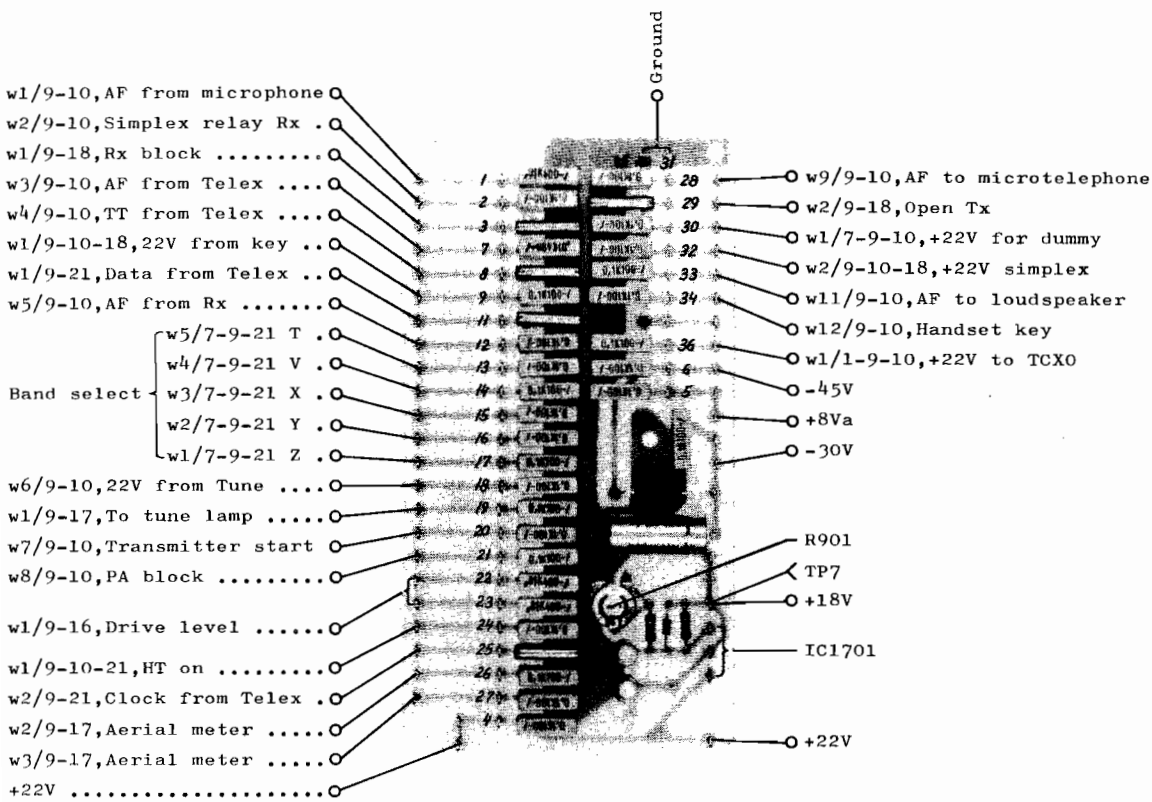

A 5135/04
4-6-23152103A

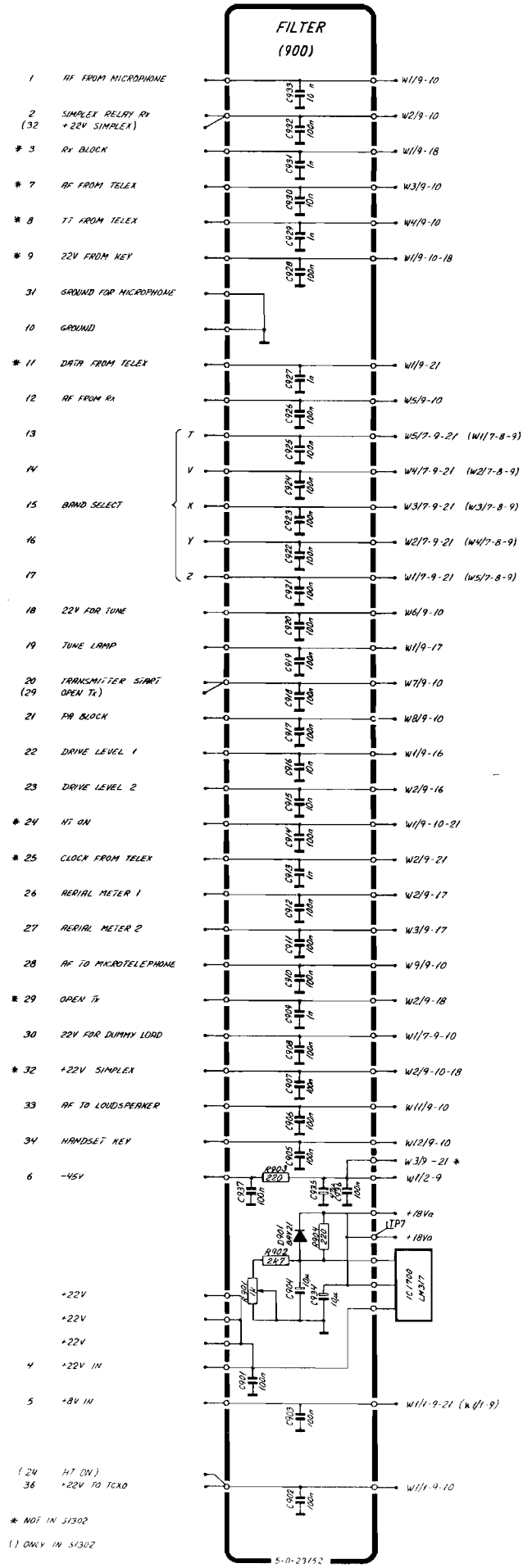
FILTER
(900)
1 RF FROM MICROPHONE
2 SIMPLEX RELAY Rx
(32 +22V SIMPLEX)
* 3 Rx BLOCK
* 7 RF FROM TELEX
* 8 TT FROM TELEX
* 9 22V FROM KEY
31 GROUND FOR MICROPHONE
10 GROUND
* 11 DATA FROM TELEX
12 RF FROM Rx
13
14
15 BAND SELECT
16
17
18 22V FOR TUNE
19 TUNE LAMP
20 TRANSMITTER START
(29 OPEN Tx)
21 PA BLOCK
22 DRIVE LEVEL 1
23 DRIVE LEVEL 2
* 24 HT ON
* 25 CLOCK FROM TELEX
26 AERIAL METER 1
27 AERIAL METER 2
28 RF TO MICROTELEPHONE
* 29 OPEN Tx
30 22V FOR DUMMY LOAD
* 32 +22V SIMPLEX
33 RF TO LOUDSPEAKER
34 HANDSET KEY
6 -45V
+22V
+22V
+22V
4 +22V IN
5 +8V IN
(24 HT ON)
36 +22V TO TCXO
* NOT IN S1302
( ) ONLY IN S1302
T
V
X
Y
Z
W1/9-10
W2/9-10
W1/9-18
W3/9-10
W4/9-10
W1/9-10-18
W1/9-21
W5/9-10
W5/7-9-21 (W1/7-8-9)
W4/7-9-21 (W2/7-8-9)
W3/7-9-21 (W3/7-8-9)
W2/7-9-21 (W4/7-8-9)
W1/7-9-21 (W5/7-8-9)
W6/9-10
W1/9-17
W7/9-10
W8/9-10
W1/9-16
W2/9-16
W1/9-10-21
W2/9-21
W2/9-17
W3/9-17
W9/9-10
W2/9-18
W1/7-9-10
W2/9-10-18
W11/9-10
W12/9-10
W3/9-21 *
W1/2-9
+18Va
+18Vo
TP7
IC1700 LM317
W1/1-9-21 (W4/1-9)
W1/1-9-10
5-0-23152

CIRCUIT DESCRIPTION SSB GENERATOR S130X

In this unit the required types of signals are generated A3A (R3E), A3H (H3E), A3J (J3E) and A1 (A1A).

SSB GENERATOR

The 600 kHz carrier signal from the divider unit is fed to the tuned amplifiers T1101 and T1102. From the collector of T1101 the 600 kHz signal is fed to the carrier reinsertion circuit. From the collector of T1102 the carrier signal is fed to the double balanced modulator IC1101, which also receives the AF signal from the microphone amplifier. The output from IC1101 is a double sideband signal, which is fed through the single sideband crystal filter for removing of the carrier and the upper sideband. The resulting lower sideband signal is fed through the impedance matching coil L1105 to the basis of transistor T1104, where the lower sideband signal and the wanted carrier voltage is added. The signal is now fed through the output amplifier consisting of T1105 and T1106 to the SSB output terminal. The amplifier T1105 and T1106 are working as a signal limit amplifier, where the maximum output voltage is controlled of the zener diode D1107 and the diodes D1106, D1105.

CARRIER INSERTION

The 600 kHz carrier signal from the collector of T1101 is fed to the voltage divider R1109, R1118, R1123, R1128 and R1130. The wanted carrier level is controlled by a DC voltage fed to one of the diodes D1101, D1102, D1103 and D1104.

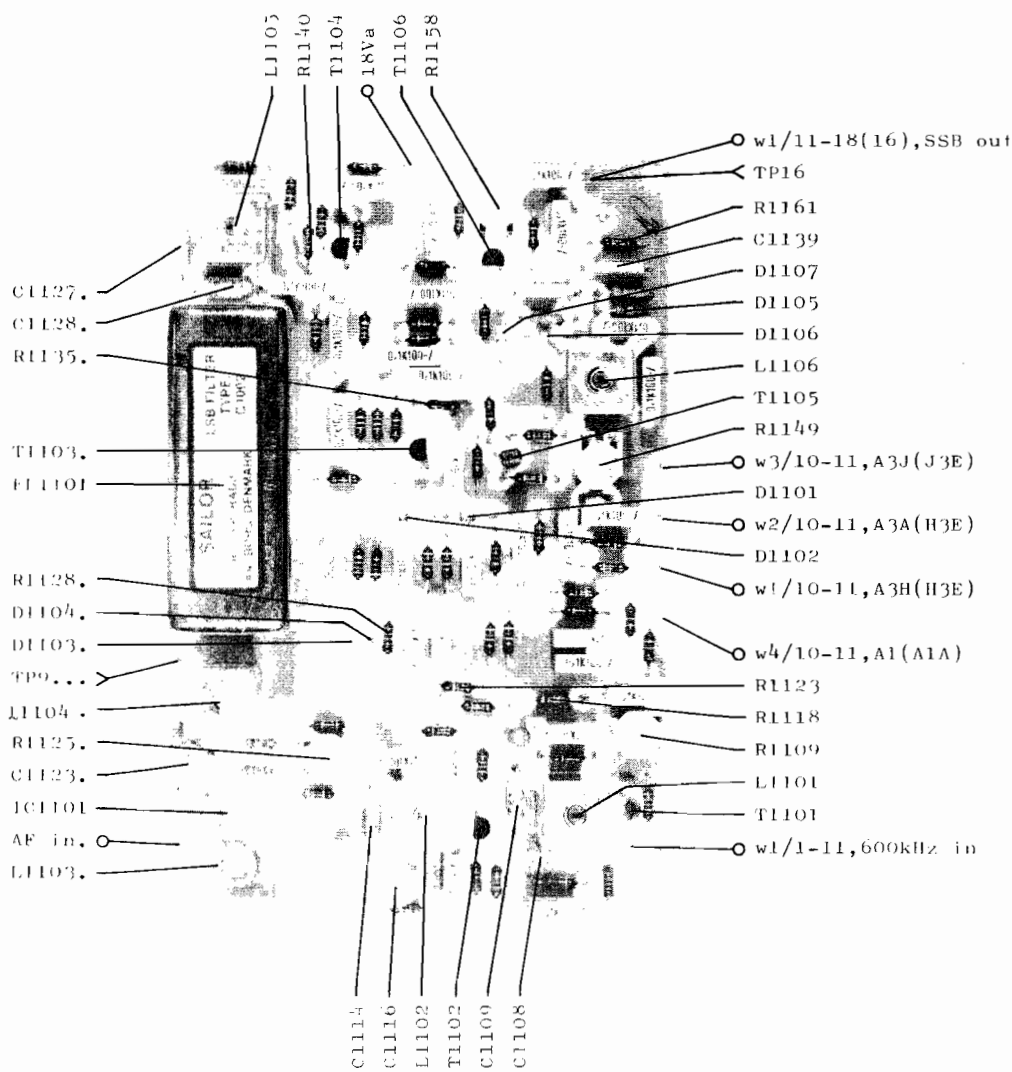

CONDITIONS

ency selector .....: 1A (f = 2.0005 MHz)
.....: A3H
put 1 kHz .....: 3 Vpp (serial condensator) } via microphone plug
.....: ON
loscope input .....: Passive probe 10 Mohm//11 pF
ltmeter input .....: 10 Mohm

Diode probe measurements

estpoints
oltage statements are typical

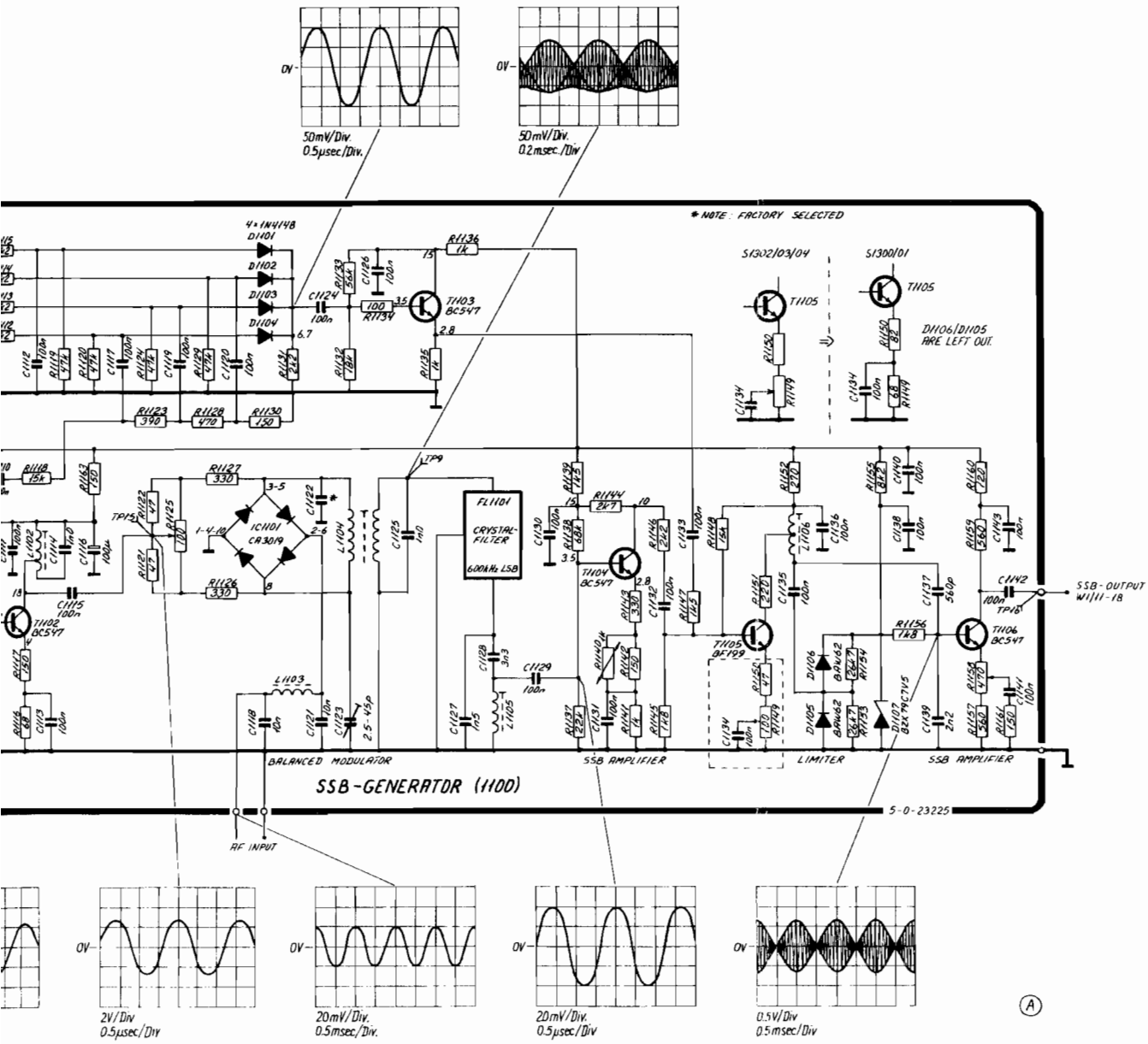

TEST CONDITIONS

Frequency selector .....: 1A (f = 2.0005 MHz)
Mode .....: A3H
AF input 1 kHz .....: 3 Vpp (serial condensator) } via microp
KEY .....: ON
Oscilloscope input .....: Passive probe 10 Mohm//11 pF
DC voltmeter input .....: 10 Mohm

◉ : Diode probe measurements

TP: Testpoints
All voltage statements are typical

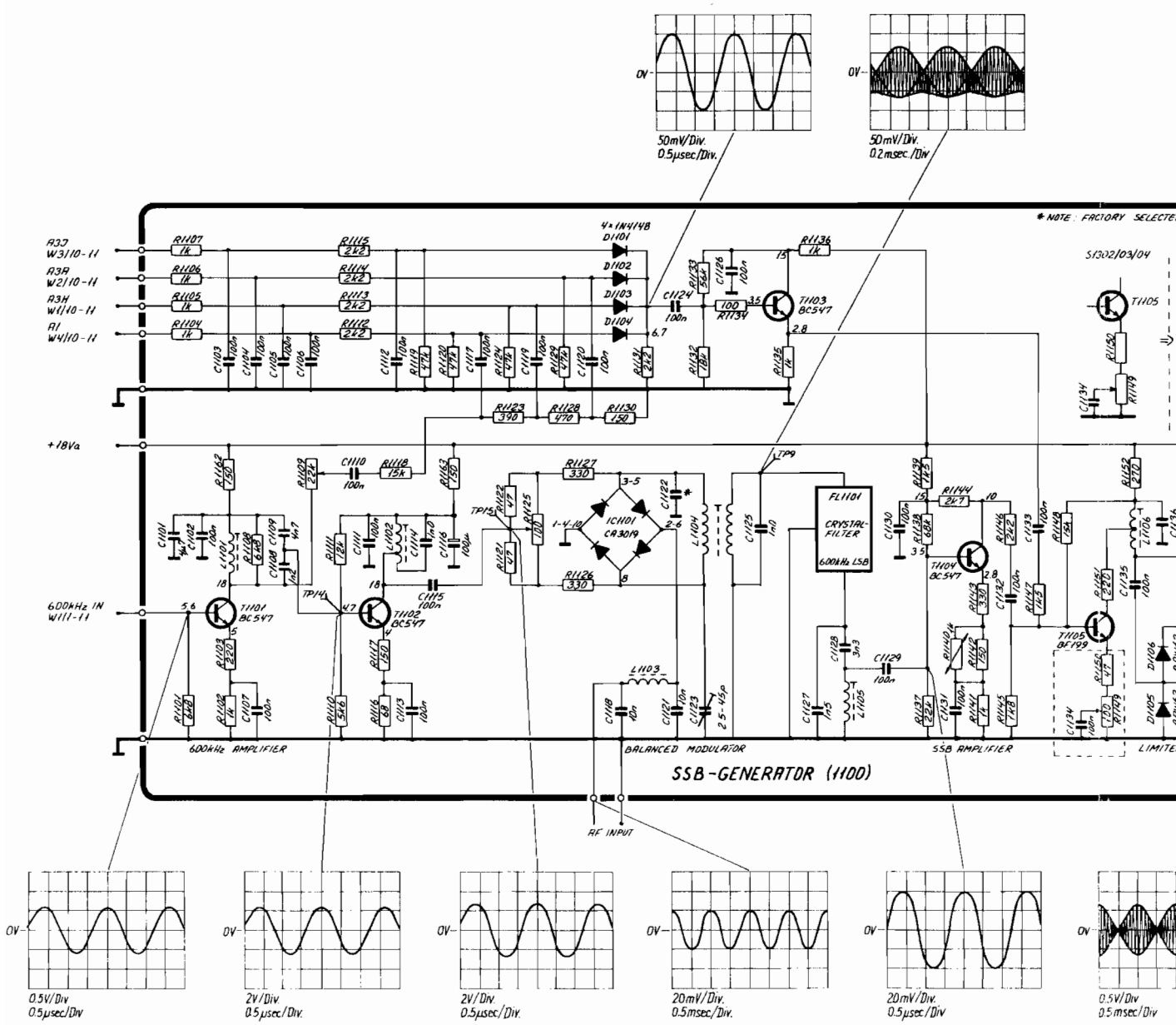

CIRCUIT DESCRIPTION MICROPHONE AMPLIFIER S130X

This unit generates and processes all the AF signals used in normal operation.

COMPRESSOR

The AF signal is after level regulation in R1201 fed into a voltage divider R1204, R1205 and then the FET T1202 acts as an electronically variable attenuator. The amount of attenuation is controlled by the voltage applied to the gate of the FET T1202.

The FET T1202 is biased in the off condition by 5.1V from zenerdicde D1202, with no control voltage applied to the gate. Under these conditions no attenuation takes place. With a control voltage of 5.1V applied to the gate, max. attenuation is obtained.

The electronically controlled attenuator is used to keep the output across the FET T1202 constant independent of speech volume, so performing a compressor action.

The control voltage already mentioned is derived from the very same signal, across the FET T1202 after amplification by T1203 and T1205. The output is taken across R1219 and fed to the level detector system consisting of T1210 and D1205.

As soon as the applied voltage to the base of T1210 becomes sufficiently low (about 4.7V) the collector current in transistor T1210 cuts off. This means that transistor T1208 normally saturated by the collector current of T1210 cuts off, leading to saturation of T1207 with the result that capacitor C1214 is charged very quickly.
The voltage across C1214 is slowly discharged via R1218 and the filter circuit R1211 and C1208 and is applied to the gate of the previously mentioned FET T1202 via R1212.

Presence of the control voltage causes the attenuation to increase until the collector current in transistor T1210 is not cut off any more, and a balanced condition is established. The amplified and compressed microphone signal then passes through to an AF filter driven by T1212 and T1213 removing signals insignificant for clarity. The AF signal from the filter is carried to the fixed voltage divider R1238, R1244, R1243 and R1242. The AF voltages from this voltage divider is chosen with the diode D1206, D1207, D1208 or D1209 feeding into the output amplifier.

TEST TONE GENERATOR

The test tone generator is a two-tone generator operating at the frequencies 2400 Hz and 1200 Hz. The multivibrator, composed of T1206, T1209 is oscillating at 2400 Hz, and in the integrated circuit IC1201 this frequency is divided to 1200 Hz, which can be measured on pin 8.

T1204 functions as emitter follower, and the 2400 Hz signal is fed from here via R1214 to the output transistor T1201. The 1200 Hz signal is also fed to T1201 via R1208 and is mixed with the 2400 Hz signal. The mixed signal is supplied to the compressor input during tuning of the transmitter and owing to the presence of the AF filter. Sinewave shaped tones are produced, as the two-tone generator itself delivers square wave voltages.

TEST CONDITIONS

Mode : TUNE

Oscilloscope input : Passive probe 10 Mohm//11 pF

DC voltmeter input : 10 Mohm

TP: Testpoints

All voltage statements are typical

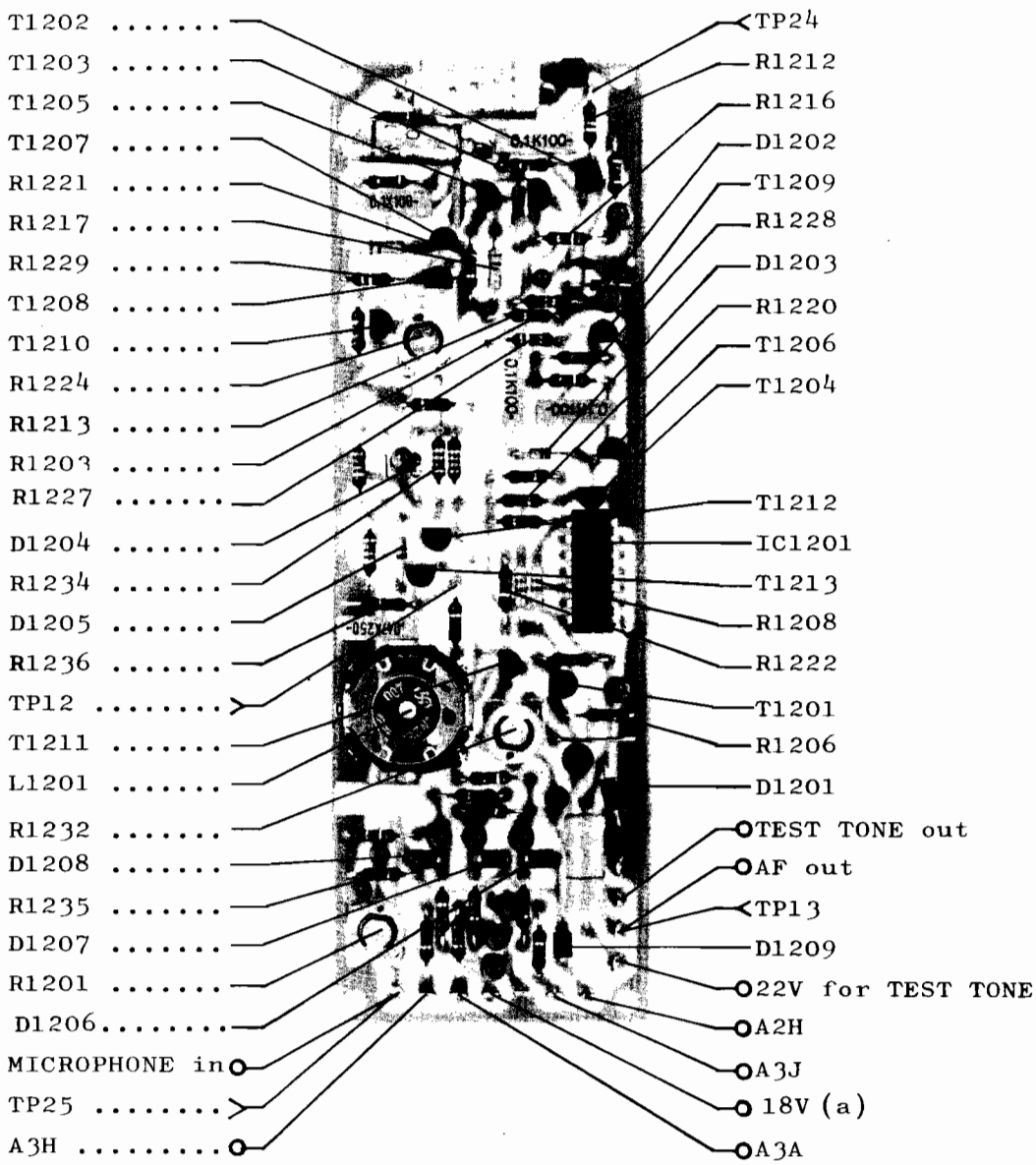

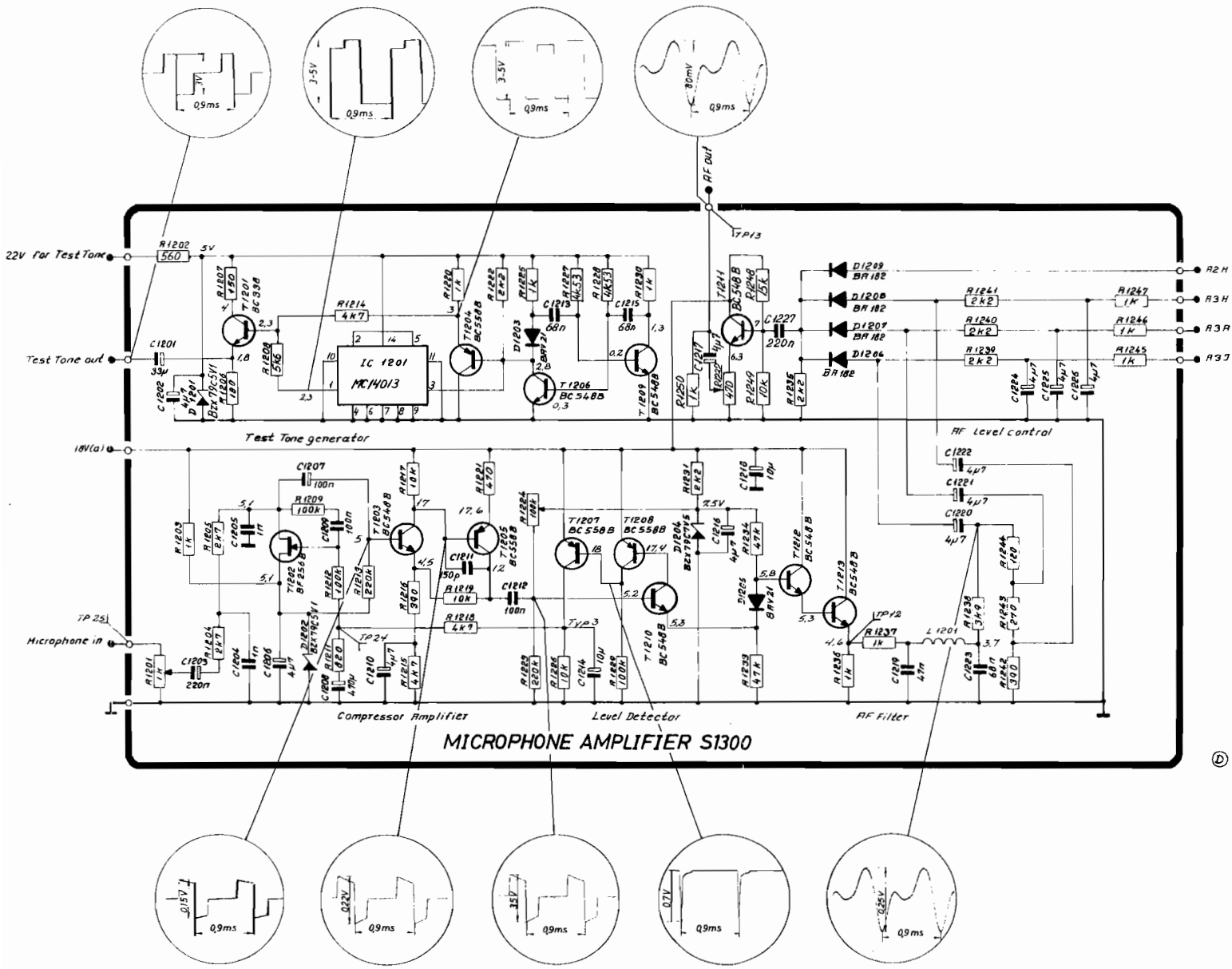
22V for Test Tone
Test Tone out
18V(a)
TP 25
Microphone in
AF out
TP13
R2H
R3H
R3A
R3T
Test Tone generator
AF Level control
Compressor Amplifier
Level Detector
AF Filter
MICROPHONE AMPLIFIER S1300
IC 1201
MC14013

CIRCUIT DESCRIPTION ALARM SIGNAL GENERATOR S130X

The alarm signal generator creates the alarm signal which consists of 2200 Hz and 1300 Hz - tones, which are transmitted in 45 secs alternately with intervals of 250 msecs. Additional it is possible to strap the generator to repeat the alarm signal transmission after a 2 minutes pause.
The alarm tones are generated by dividing down the 10 MHz TCXO signal to the wanted frequencies. The generator starts when the 22V supply is applied. T1303 and T1304 amplify the 10 MHz signal to TTL level. IC1313 is a 16 divider and its output on 625 kHz is fed to the programmable divider consisting of IC1307, IC1312, IC1302b, IC1302d, IC1303a and IC1311. Pin 9 of IC1312a goes high when IC1307 has received 141 clock pulses. If pin 12 of IC1302d is high (2200 Hz) the J input of IC1311a follows the output of IC1312a and then the FF 1311a will toggle on the next clock pulse. This clears the counter IC1307, now J and K input of IC1311a is "0" and "1" which will let it toggle on the next clock pulse and then the counter IC1307 will start counting again.

The timing is shown on fig. 1. After a division by two in IC1311b the output at pin 15 will be 2200 Hz which occurs like this 625000/(141+1)2 = 2200.
When the wanted frequency is 1300 Hz, pin 12 on IC1302d must be "0" and then the J input on IC1311a will not be "1" before the output of IC1312a and IC1312b both are "1". When this happens the amount of clock pulses to IC1307 is 141 + 98 = 239 (141 detected by IC1312a and 98 detected by IC1312b). The dividing figure from clock input of IC1307 to Q output of IC1311b is (141 + 98 + 1)2 and the resulting frequency is 625000/(141 + 98 + 1)2 = 1302 Hz.
With a mode of operation similar to the before mentioned divider, which generates the 2200 Hz and the 1302 Hz tones, a circuit formed by IC1310, IC1309, IC1302a, IC1303b and IC1308 dividers. These tones down to 2 Hz which means that the output of IC1308b changes state every 250 msecs. The dividing figures detected at the output of IC1309b and IC1309c are 549 and 324 respectively.
This dividing circuit controls both its own dividing figure (IC1308b pin 15) and the dividing figure (IC1308b pin 14) in the circuit which makes the 2200 and 1302 Hz tones. The timing is shown in fig. 1.

When the alarm generator starts by power-up, IC1305 is reset via IC1303c. This turns on T1305 which gates the alarm signal to the ALARM SIGNAL OUT connection. IC1305 counts the 2 Hz pulses from IC1308b and when an amount of 90 is reached (after 45 secs) the output of IC1304b is "1" which stops the clock pulses to IC1305 and turns off T1305 which blocks the gate IC1302C and hereby stops the alarm signal transmission. However the 2 Hz pulses at IC1308b are still running as long as the unit is powered up. When alarm transmission is stopped by T1305, IC1306 is not reset any longer and it will start counting the 2 Hz pulses. After 240 pulses (2 minutes) pin 1 of IC1304a is "1" and if the strap to pin 8 of IC1303c is on, IC1305 will be reset and the alarm signal transmission starts for another 45 secs. If the mentioned strap is present the alarm signal transmission will be repeated for every 2 3/4 minutes, otherwise it is only transmitted for one 45 secs. period.

FIG.1

NUMBERS WITHOUT BRAKETS ~ 2200Hz, IC1302d PIN 12 = "1"

NUMBERS WITH BRAKETS ~ 1302 Hz, IC1302d PIN 12 = "0"

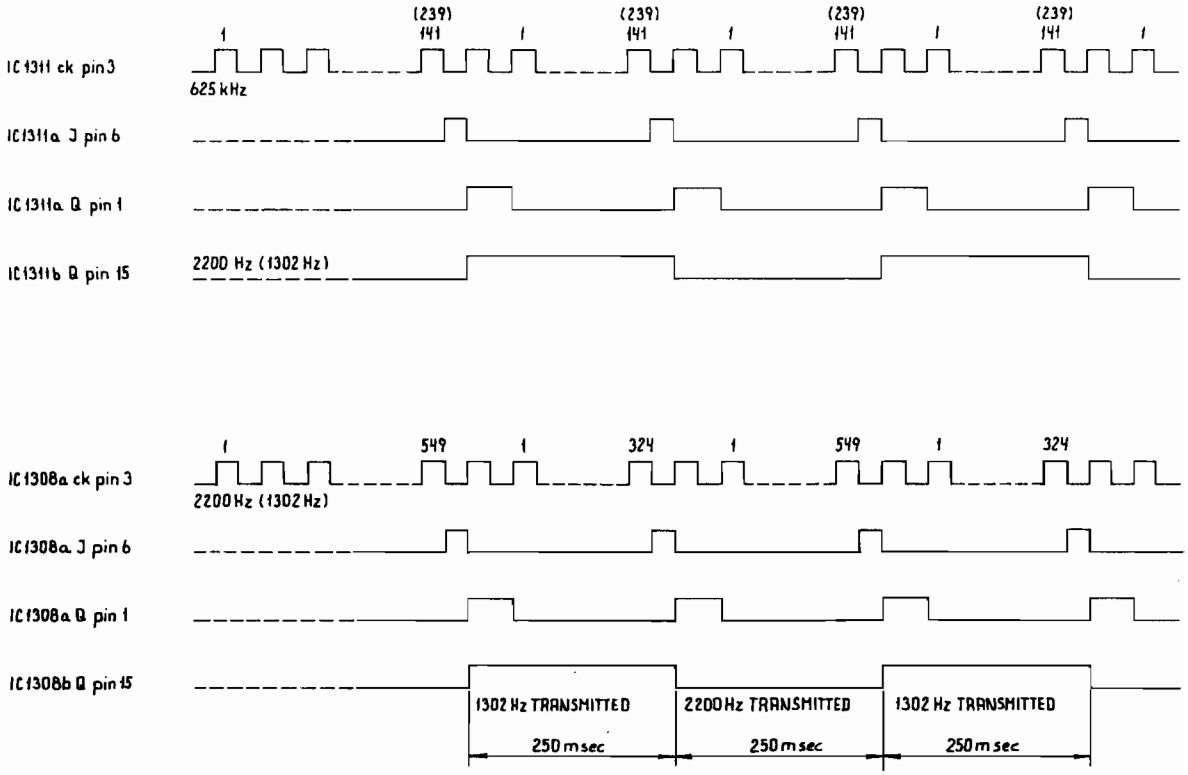

4-0-23276D/4-6-23276B/4-0-25100

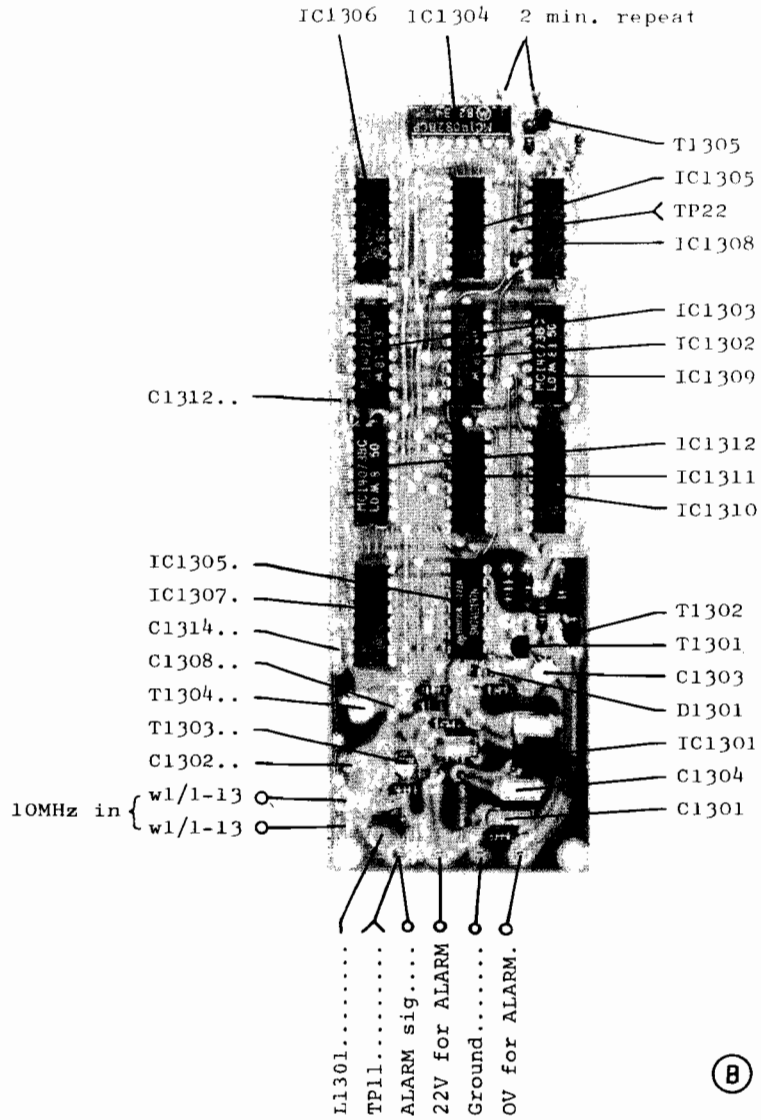
IC1306
IC1304
2 min. repeat
T1305
IC1305
TP22
IC1308
IC1303
IC1302
IC1309
C1312..
IC1312
IC1311
IC1310
IC1305.
IC1307.
C1314..
C1308..
T1304..
T1303..
C1302..
10MHz in
w1/1-13
w1/1-13
T1302
T1301
C1303
D1301
IC1301
C1304
C1301
L1301.....
TP11.....
ALARM sig....
22V for ALARM
Ground.....
0V for ALARM.

(B)

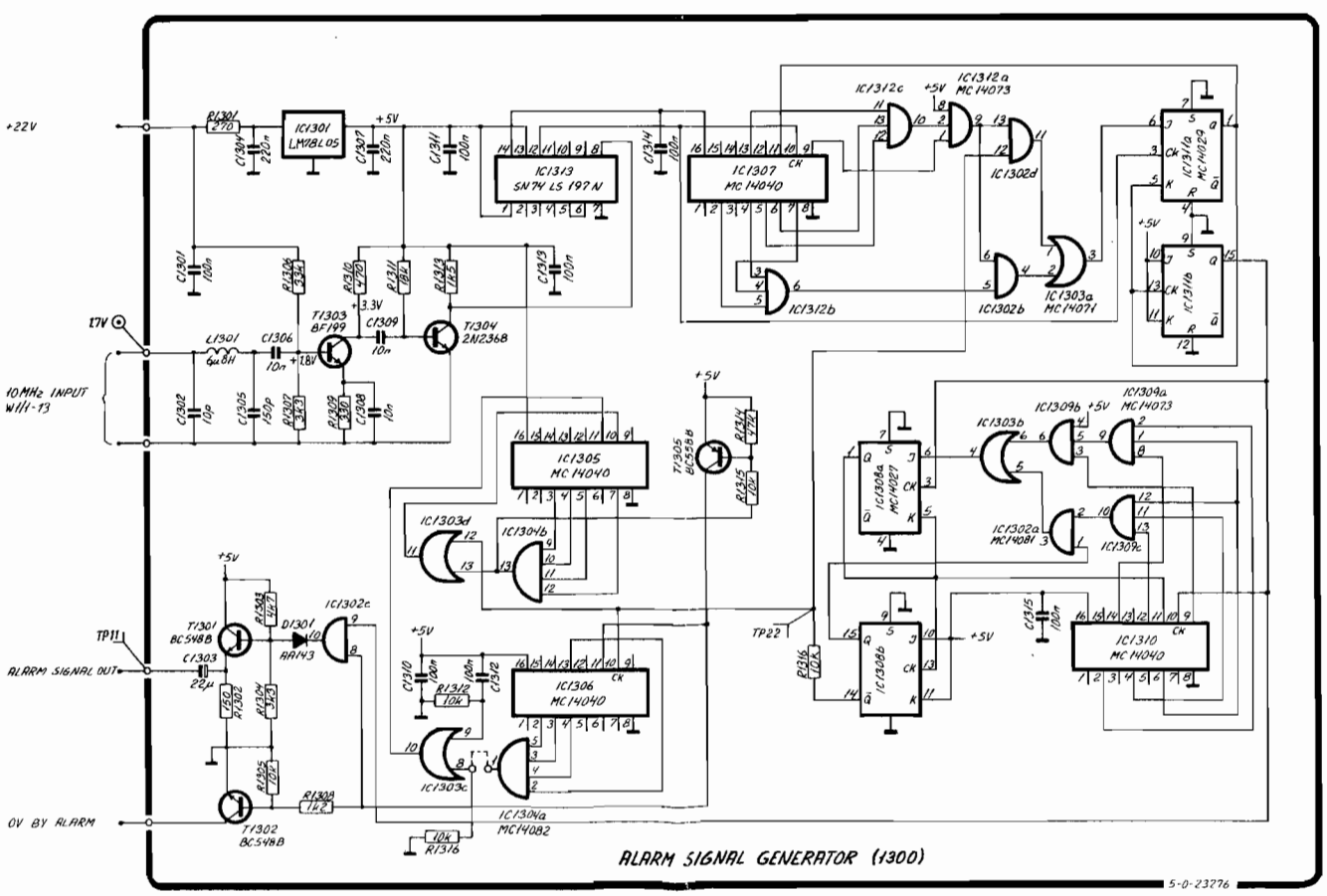
+22V
17V
10MHz INPUT
W1/1-13
TP11
ALARM SIGNAL OUT
0V BY ALARM
IC1301
LM78L05
IC1313
SN74 LS 197N
IC1307
MC14040
IC1305
MC14040
IC1306
MC14040
IC1310
MC14040
IC1311a
MC14029
IC1311b
IC1308a
MC14027
IC1308b
IC1309a
MC14073
IC1309b
IC1309c
IC1302a
MC14081
IC1302b
IC1302c
IC1302d
IC1303a
MC14071
IC1303b
IC1303c
IC1303d
IC1304a
MC14082
IC1304b
IC1305
BC558B
IC1306
BC548B
IC1307
BF199
IC1308
2N2368
IC1309
AA143
T1301
BC548B
T1302
BC548B
TP22
ALARM SIGNAL GENERATOR (1300)
5-0-23276

(D)

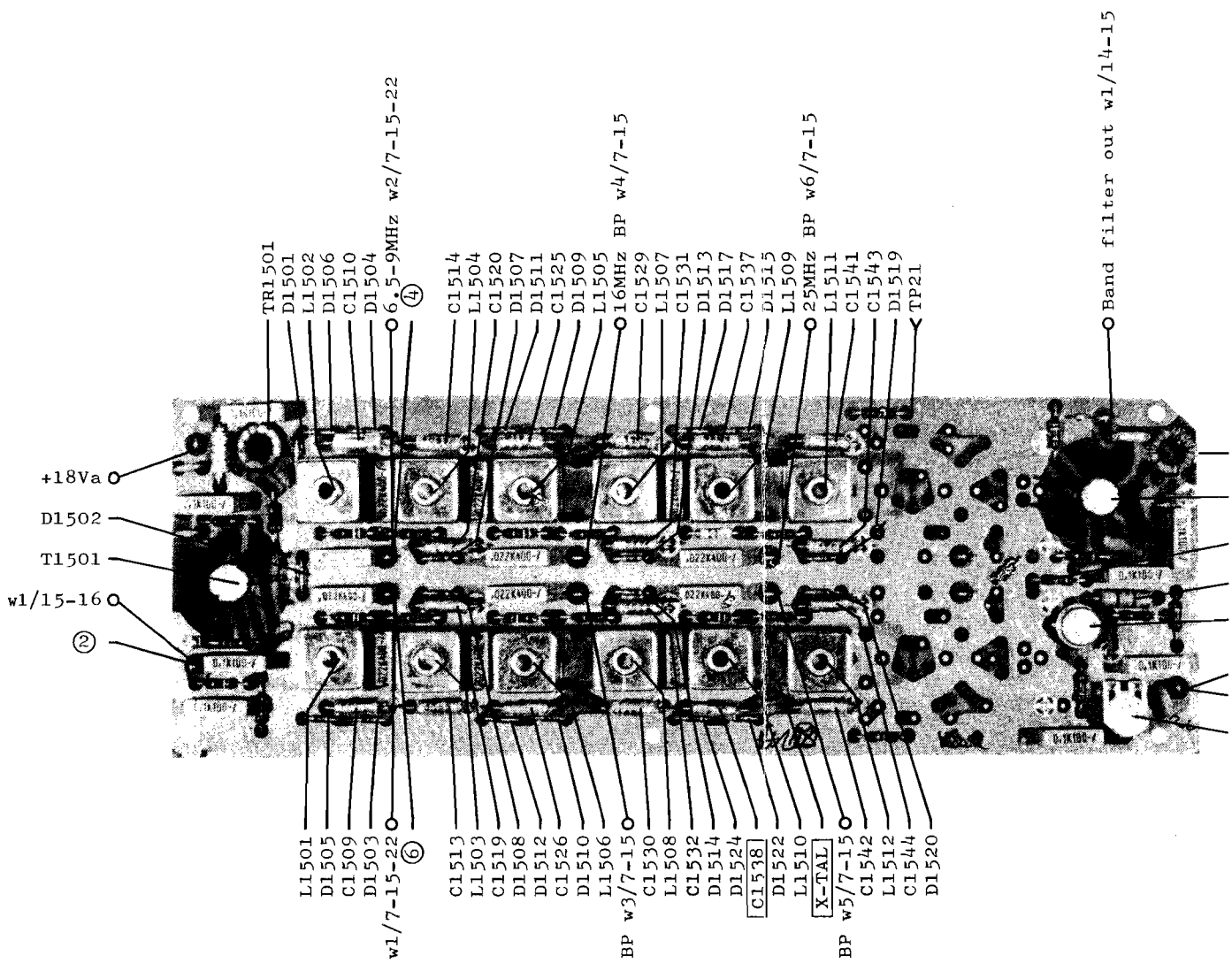
TR1501
D1501
L1502
D1506
C1510
D1504
6.5-9MHz w2/7-15-22
C1514
L1504
C1520
D1507
D1511
C1525
D1509
L1505
16MHz BP w4/7-15
C1529
L1507
C1531
D1513
D1517
C1537
D1515
L1509
25MHz BP w6/7-15
L1511
C1541
C1543
D1519
TP21
Band filter out w1/14-15
+18Va
D1502
T1501
w1/15-16
2
L1501
D1505
C1509
D1503
0-6.5MHz LP w1/7-15-22
6
C1513
L1503
C1519
D1508
D1512
C1526
D1510
L1506
12MHz BP w3/7-15
C1530
L1508
C1532
D1514
D1524
C1538
D1522
L1510
X-TAL
22MHz BP w5/7-15
C1542
L1512
C1544
D1520

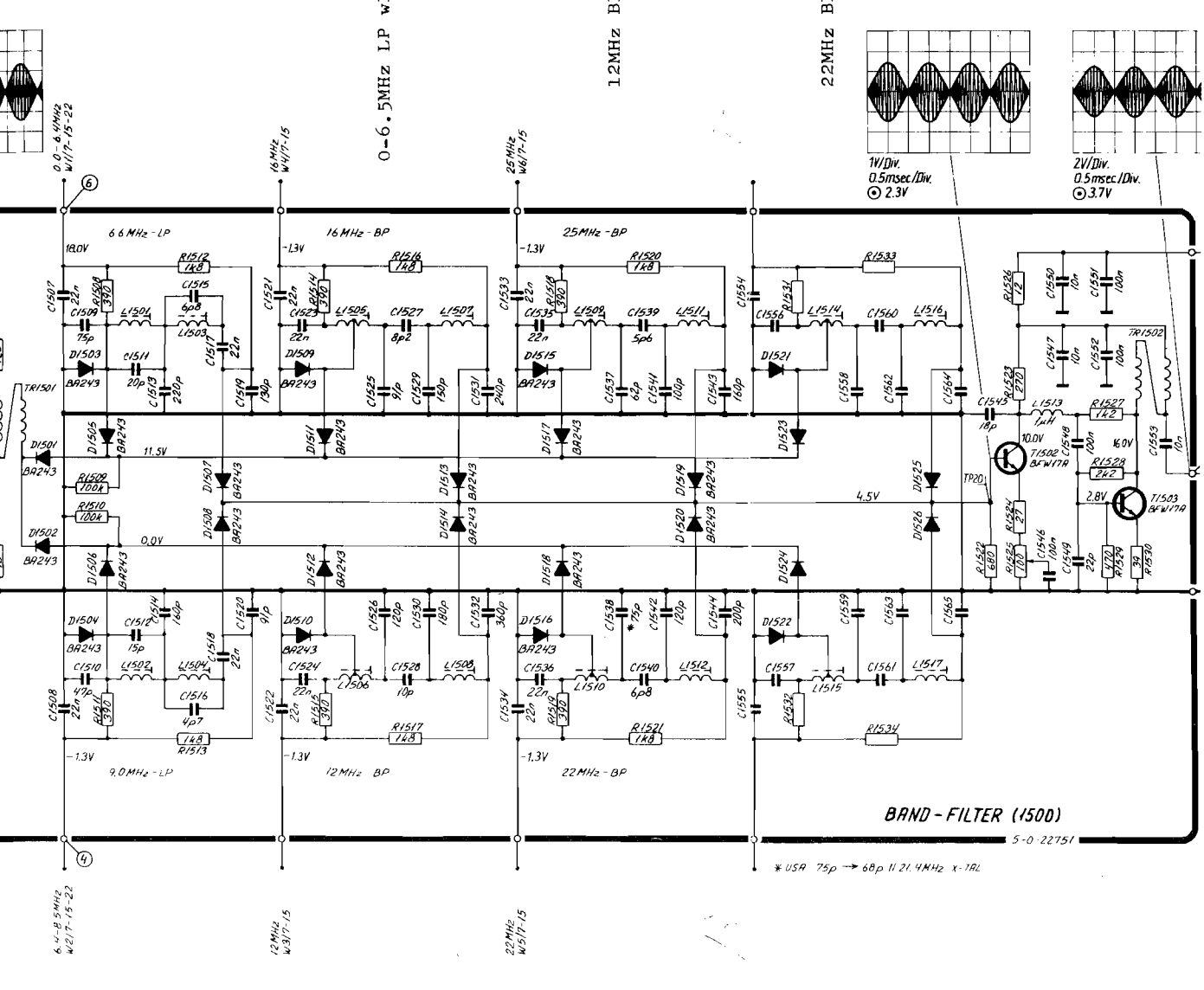
1V/Div.
0.5msec./Div.
2.3V
2V/Div.
0.5msec./Div.
3.7V
6.6 MHz - LP
16 MHz - BP
25MHz - BP
9.0MHz - LP
12MHz BP
22MHz - BP
BAND - FILTER (1500)
5-0-22751
* USA 75p → 68p 11.21.4MHz X-TAL

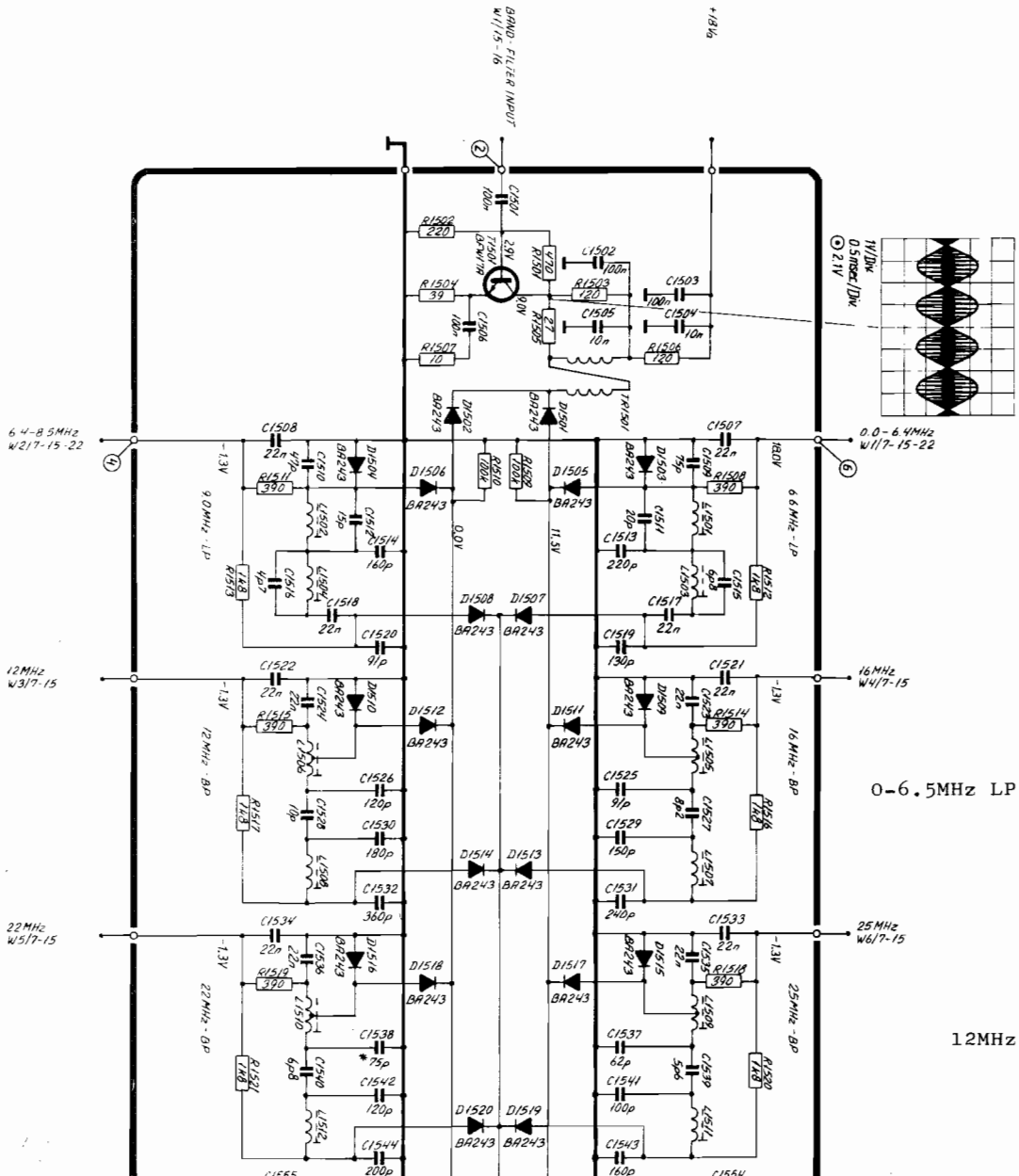
BAND-FILTER INPUT w1/15-16
+18Va
6.4-8.5MHz w2/7-15-22
0.0-6.4MHz w1/7-15-22
9.0MHz-LP
6.6MHz-LP
12MHz w3/7-15
12MHz-BP
16MHz w4/7-15
16MHz-BP
22MHz w5/7-15
22MHz-BP
25MHz w6/7-15
25MHz-BP
-13V
0.0V
11.5V
18.0V

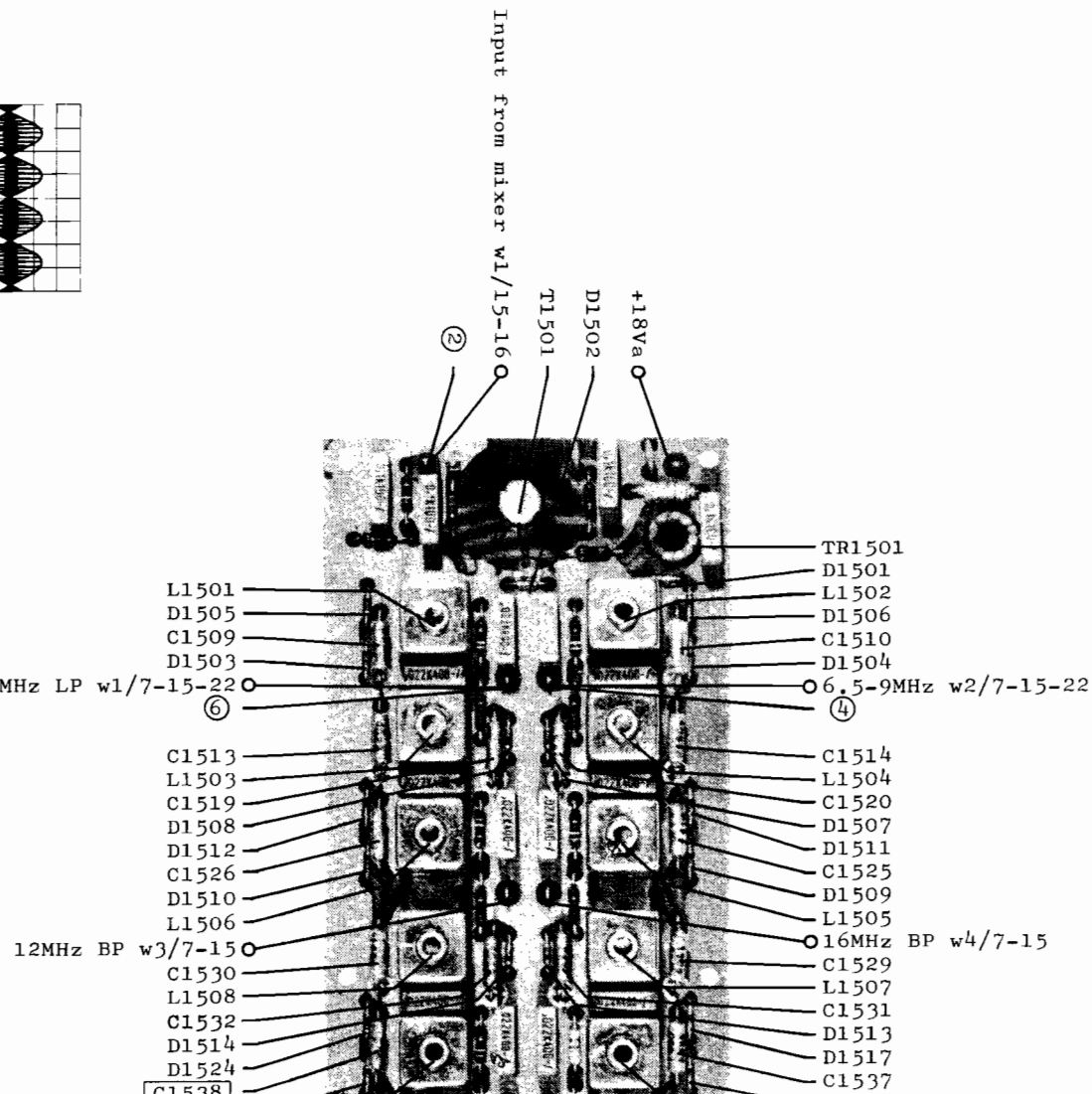
Input from mixer w1/15-16
T1501
D1502
+18Va
TR1501
D1501
L1502
D1506
C1510
D1504
6.5-9MHz w2/7-15-22
C1514
L1504
C1520
D1507
D1511
C1525
D1509
L1505
16MHz BP w4/7-15
C1529
L1507
C1531
D1513
D1517
C1537
L1501
D1505
C1509
D1503
0-6.5MHz LP w1/7-15-22
C1513
L1503
C1519
D1508
D1512
C1526
D1510
L1506
12MHz BP w3/7-15
C1530
L1508
C1532
D1514
D1524
C1538

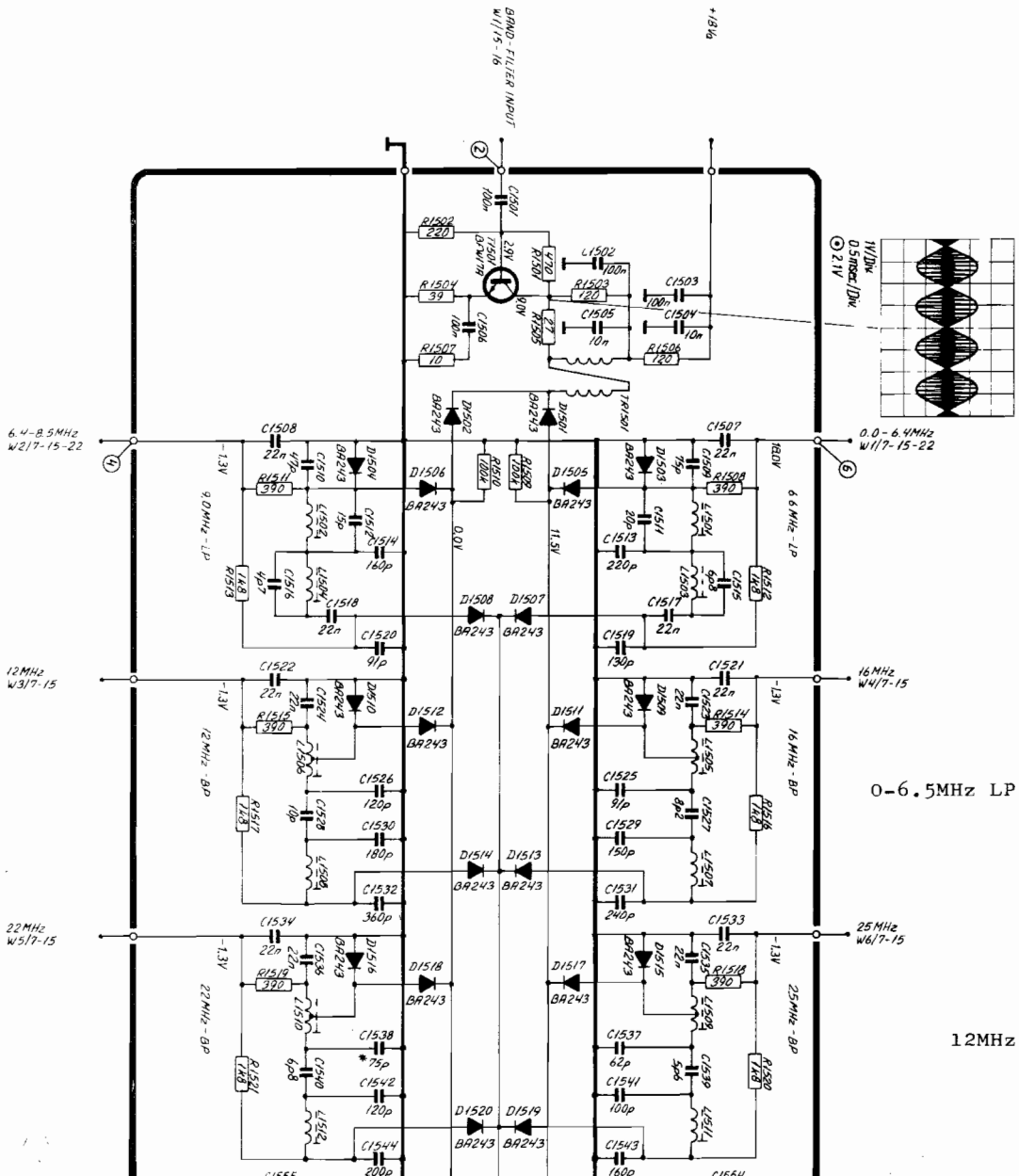
BAND-FILTER INPUT w1/15-16
+18Va
6.4-8.5MHz w2/7-15-22
0.0-6.4MHz w1/7-15-22
12MHz w3/7-15
16MHz w4/7-15
22MHz w5/7-15
25MHz w6/7-15
9.0MHz-LP
6.6MHz-LP
12MHz-BP
16MHz-BP
22MHz-BP
25MHz-BP
-13V
0.0V
11.5V
18.0V
11V/10µs
0.5V/50µs/Div
2.1V
TR1501
D1502
BA243

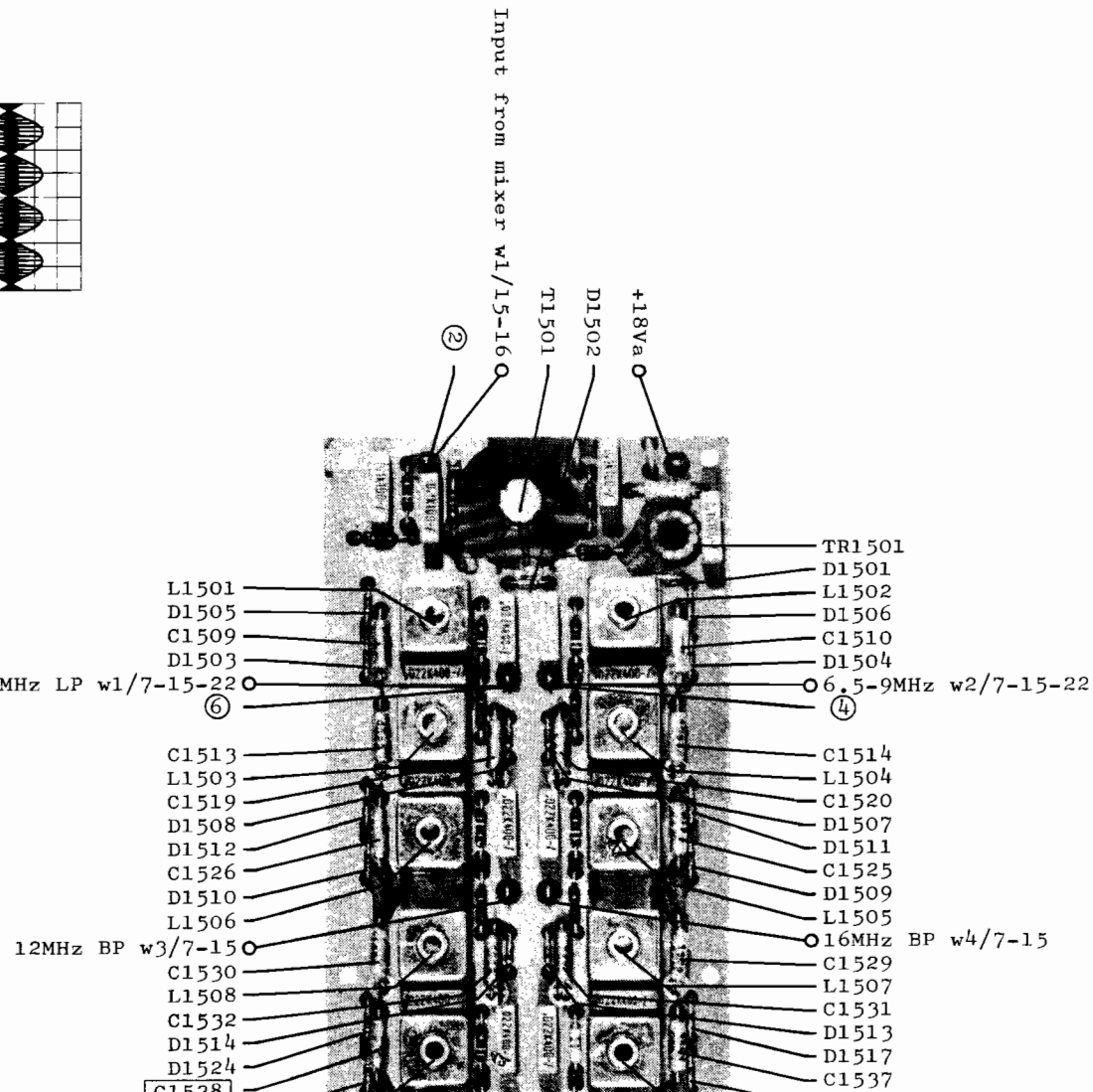
Input from mixer w1/15-16
T1501
D1502
+18Va
TR1501
D1501
L1501
D1505
C1509
D1503
0-6.5MHz LP w1/7-15-22
D1506
C1510
D1504
6.5-9MHz w2/7-15-22
C1513
L1503
C1519
D1508
D1512
C1526
D1510
L1506
12MHz BP w3/7-15
C1530
L1508
C1532
D1514
D1524
C1528
C1514
L1504
C1520
D1507
D1511
C1525
D1509
L1505
16MHz BP w4/7-15
C1529
L1507
C1531
D1513
D1517
C1537

CIRCUIT DESCRIPTION MIXER UNIT S130X

In this unit the 600 kHz signal from the SSB generator is mixed together with the VCXO and VCO signals in two steps to produce the wanted output frequency. In addition the necessary power level regulation is controlled in this unit.

SECOND

The transistors T1602 and T1603 form a balanced mixer. The 600 kHz signal is fed into the mixer via the phase splitting transformer TR1601. The VCXO signal is fed into the emitters via the buffer amplifier T1601. In this transistor it is possible to regulate the DC working point in two ways. One: changing the emitter resistor at the point "fixed power regulation". Two: changing the base current via a potentiometer between the two points "drive level potmeter". This DC working point regulation will control the amplitude of the VCXO signal to the mixer and in that way the output power is regulated.

FILTER AND AMPLIFIER

The second mixer feeds into the crystal filter FL1601. The tuned circuits containing L1601 and L1602 around the filter carry out proper impedance-matching to the filter. T1604 and T1605 are two buffer amplifiers, the circuit C1622, L1604, C1623 and R1643 carries out correct generator impedance for the mixer M1601.

THIRD MIXER

The third mixer M1601 is a double balanced hotcarrier diode mixer which mixes the 10.7 MHz signal together with the chosen VCO signal. The transistor T1606 is a wideband power amplifier supplying the mixer with the necessary power for proper operation. Output from the mixer is fed into the band filter unit.

TEST CONDITIONS

Frequency selector ..... : 1A (f = 2.0005 MHz)
Power level ..... : FULL
Mode ..... : TUNE
Maximum drive, 50 ohm connected to TX out, J1702
Oscilloscope input ..... : Passive probe 10 Mohm/11 pF
DC voltmeter input ..... : 10 Mohm

⦿ : Diode probe measurements

TP: Testpoints
All voltage statements are typical

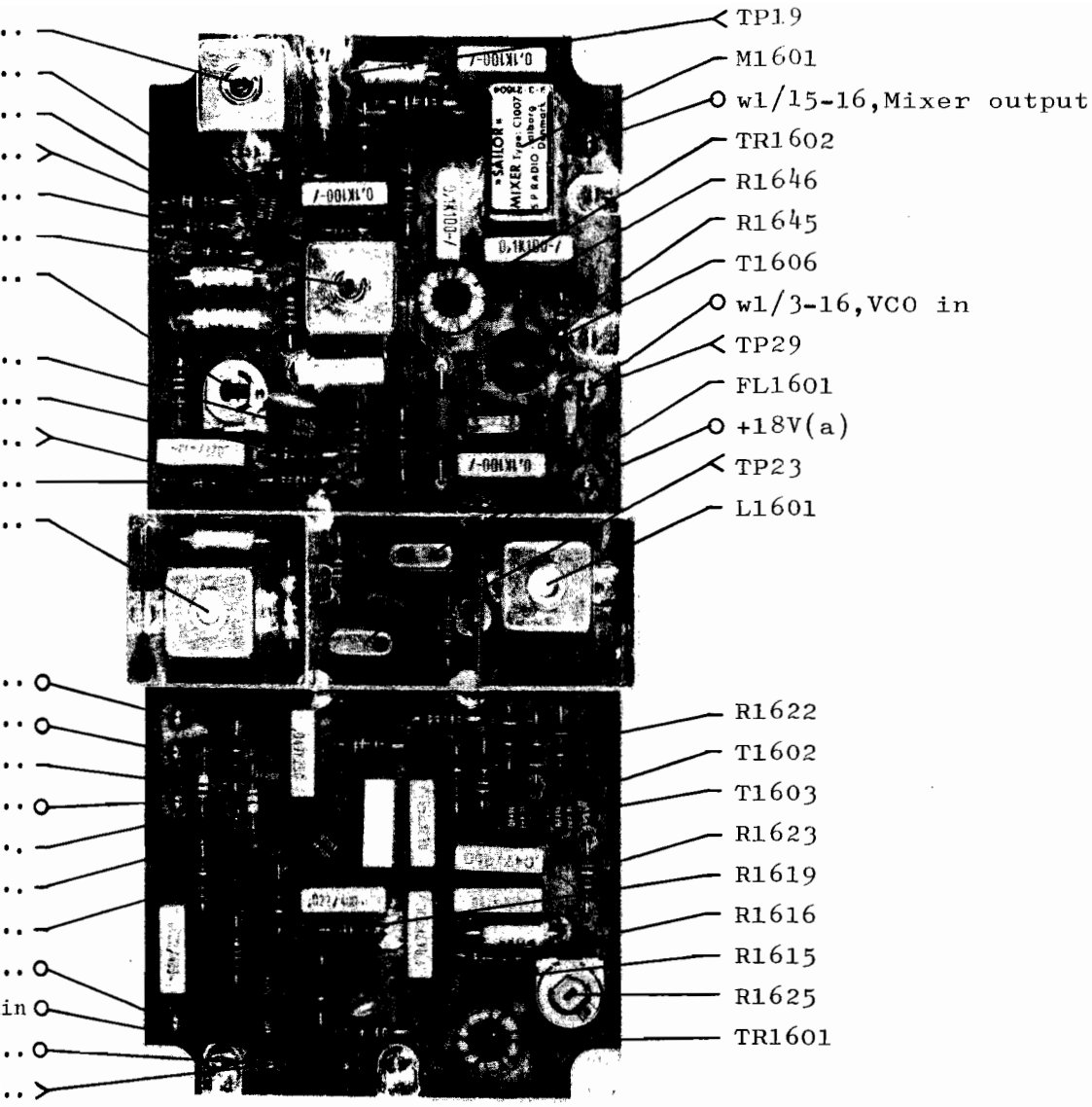
TP19
M1601
w1/15-16,Mixer output
TR1602
R1646
R1645
T1606
w1/3-16,VCO in
TP29
FL1601
+18V(a)
TP23
L1601
R1622
T1602
T1603
R1623
R1619
R1616
R1615
R1625
TR1601

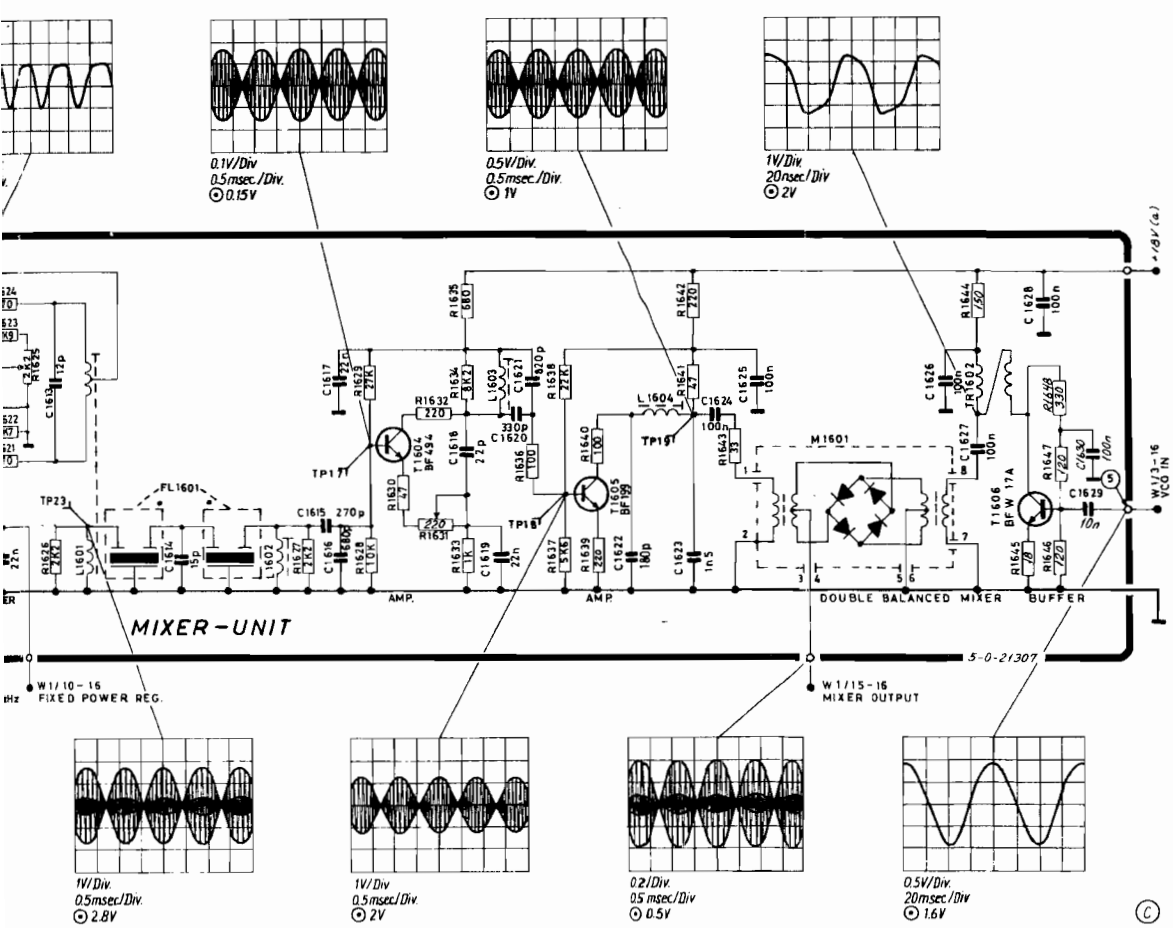
0.1V/Div
0.5msec./Div.
⊙0.15V
0.5V/Div.
0.5msec./Div.
⊙1V
1V/Div.
20msec./Div
⊙2V
MIXER-UNIT
AMP.
AMP.
DOUBLE BALANCED MIXER
BUFFER
5-0-21307
W1/10-16
FIXED POWER REG.
W1/15-16
MIXER OUTPUT
W1/3-16
VCO IN
1V/Div.
0.5msec/Div.
⊙2.8V
1V/Div
0.5msec/Div
⊙2V
0.2/Div.
0.5 msec/Div
⊙0.5V
0.5V/Div.
20msec/Div
⊙1.6V

©

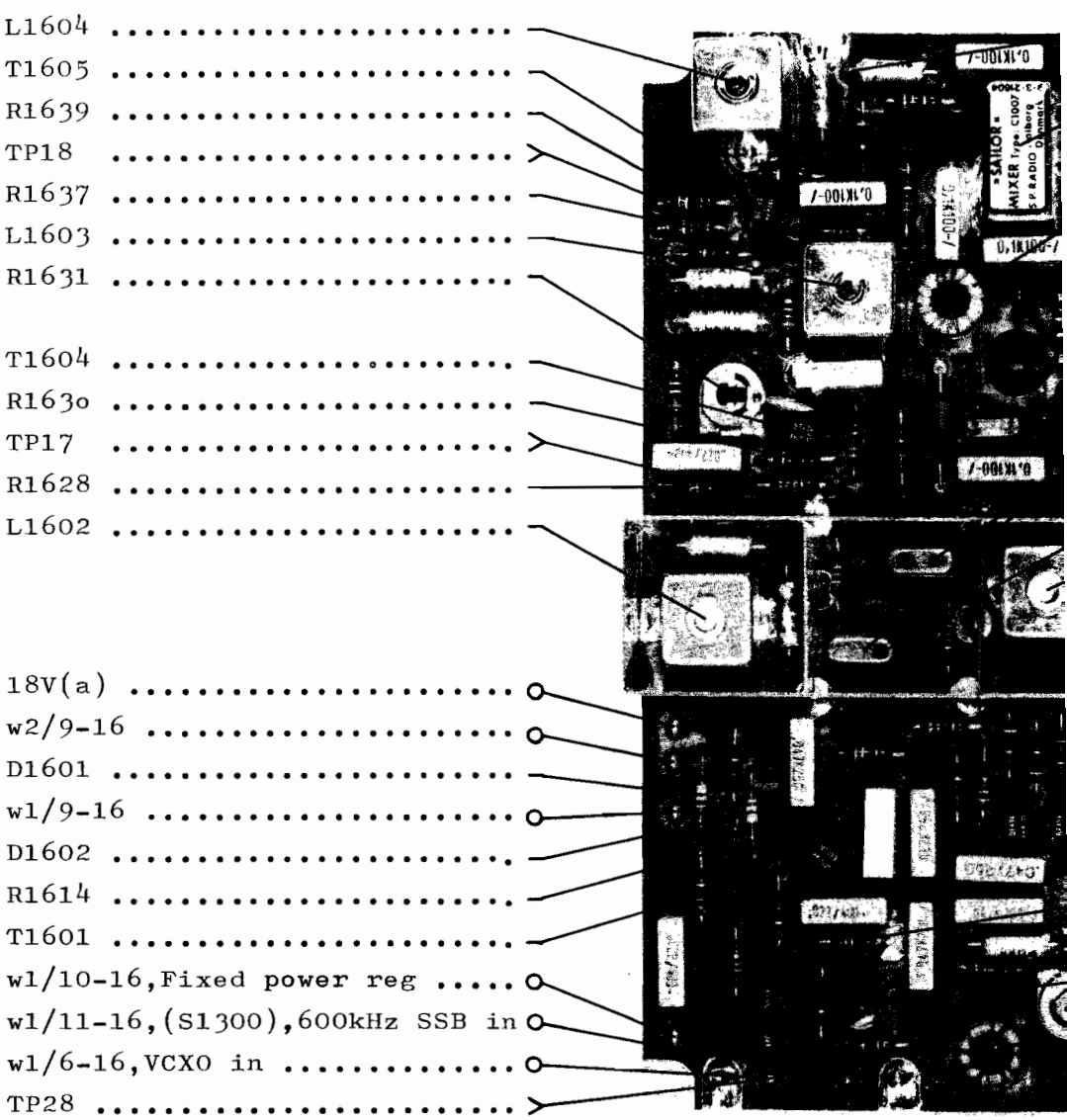
L1604 .....
T1605 .....
R1639 .....
TP18 .....
R1637 .....
L1603 .....
R1631 .....
T1604 .....
R1630 .....
TP17 .....
R1628 .....
L1602 .....
18V(a) .....
w2/9-16 .....
D1601 .....
w1/9-16 .....
D1602 .....
R1614 .....
T1601 .....
w1/10-16,Fixed power reg .....
w1/11-16,(S1300),600kHz SSB in
w1/6-16,VCXO in .....
TP28 .....

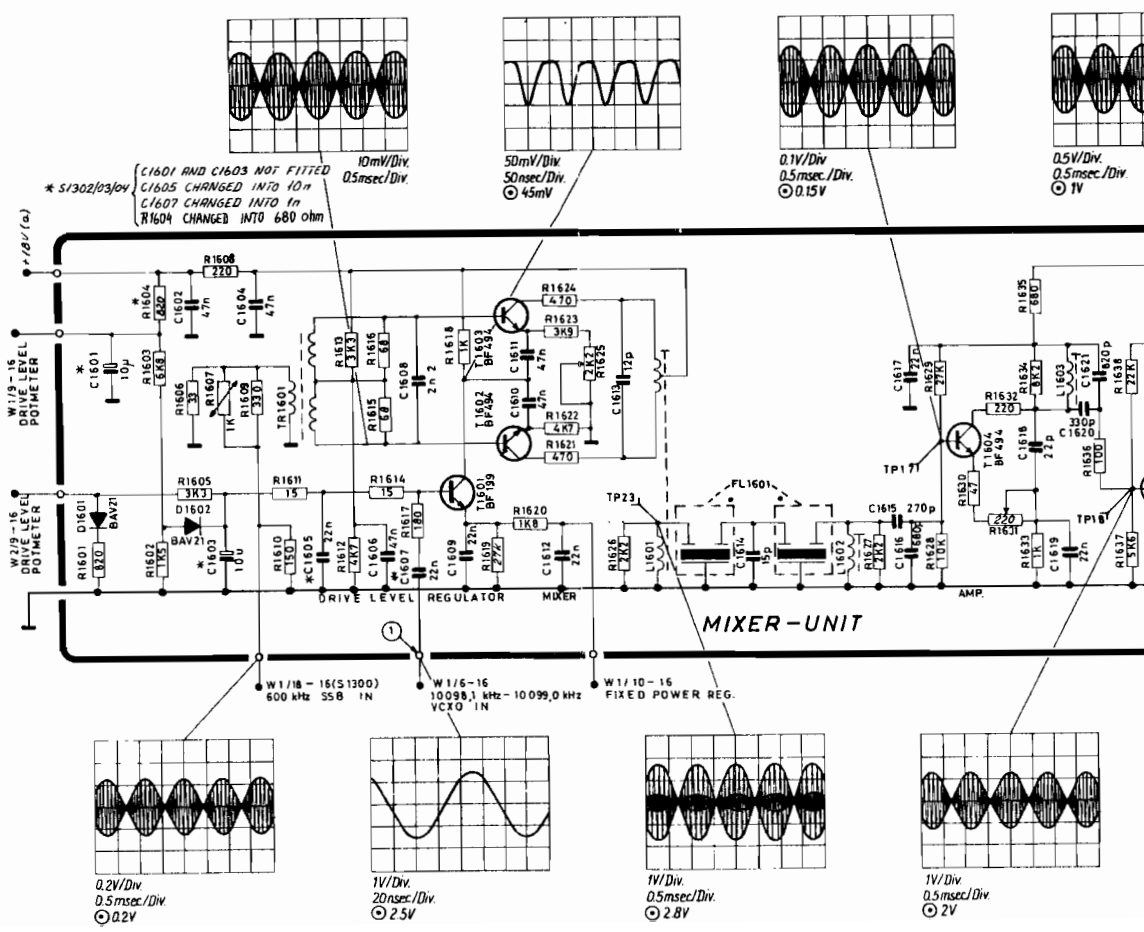
* S1302/03/04
C1601 AND C1603 NOT FITTED
C1605 CHANGED INTO 10n
C1607 CHANGED INTO 1n
R1604 CHANGED INTO 680 ohm
10mV/Div. 0.5msec/Div.
50mV/Div. 50nsec/Div. 45mV
0.1V/Div 0.5msec./Div. 0.15V
0.5V/Div. 0.5msec./Div. 1V
+18V(a)
W1/9-16 DRIVE LEVEL POTMETER
W2/9-16 DRIVE LEVEL POTMETER
DRIVE LEVEL REGULATOR
MIXER
AMP.
MIXER-UNIT
W1/18-16(S1300) 600 kHz SSB IN
W1/6-16 10098,1 kHz-10099,0 kHz VCXO IN
W1/10-16 FIXED POWER REG.
0.2V/Div. 0.5msec./Div. 0.2V
1V/Div. 20nsec/Div. 2.5V
1V/Div. 0.5msec/Div. 2.8V
1V/Div. 0.5msec/Div. 2V

CIRCUIT DESCRIPTION BAND FILTER S1302/03/04

This unit contains two amplifiers, four band-pass filters, and two low-pass filters.

The signal from the third mixer appears at the base of the first amplifier T1501 via C1501. This amplifier is supplied with feed-back via R1501 and R1505 to act as the correct load for the mixer. The output from this amplifier is via an 1:2 transformer TR1501 fed to the selected band-pass filter or low-pass filter.

The proper filter is selected with DC voltages from the VCO selector unit. When the 0-6.4 MHz LP filter is selected, the supplied DC control voltage is biasing the diodes D1501, D1505, and D1507 in the forward direction and the diode D1503 in the reverse direction.

The output from the chosen filter is fed to the buffer transistor T1502 and via a frequency compensating network, consisting of L1513 and C1549, through the transistor T1503 to the output terminals.

TEST CONDITIONS

Frequency selector ..... : 1A (f = 2.0005 MHz)
Power level ..... : FULL
Mode ..... : TUNE
Maximum drive, 50 ohm connected to TX out, J1702
Oscilloscope input ..... : Passive probe 10 Mohm//11 pF
DC voltmeter input ..... : 10 Mohm

⊙ : Diode probe measurements

TP: Testpoints
All voltage statements are typical

CIRCUIT DESCRIPTION OUTPUT FILTER S1302/03/04

This unit contains a combined band stop and low-pass filter.

The band stop filter has a 1 dB bandwidth of approx. 1.7 MHz and the center frequency is 10.7 MHz.

The low-pass filter has a 3 dB frequency of approx. 33.3 MHz.

The band stop frequency is adjusted with L1401, L1403, and L1404.

The low-pass frequency is adjusted with L1402.

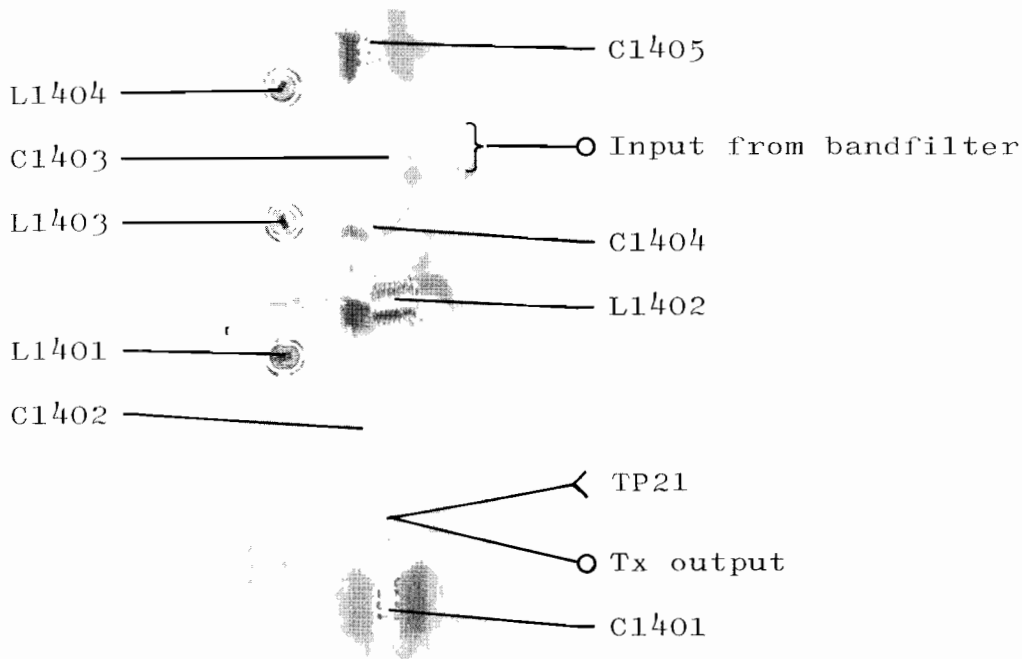

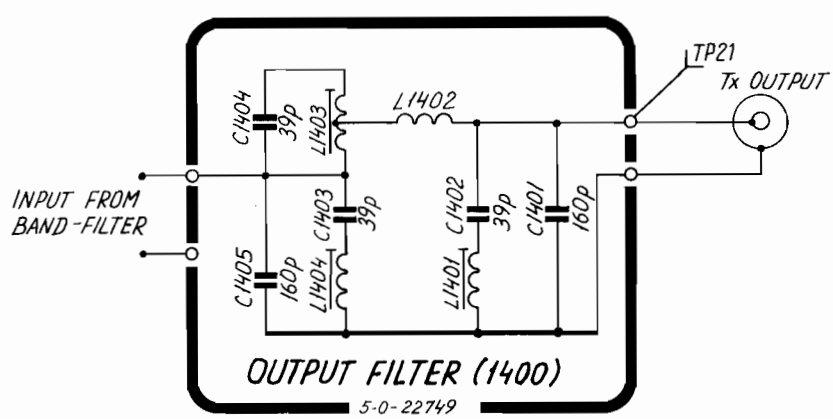

CIRCUIT DESCRIPTION A2H OSCILLATOR AND DELAY UNIT S130X

This unit generates the necessary AF signal to modulate the exciter in the A2H mode and the necessary time delays for the telegraphy and telex operation.

A2H OSCILLATOR

The A2H AF oscillator is built-up around T1801 with the turned circuit C1803, C1804 and L1801 adjustable to the wanted frequency 465 Hz.

The output is a combination of a DC voltage to switch on the diode in the microphone amplifier, and the AF signal which is controlled via potentiometer R1806.

TX-DELAY

+22V FROM KEY controls T1805 to conduct, and T1805 will then supply +22V FROM TX-DELAY to the relays 600 kHz LSB ON/OFF and TX ON/OFF in telegraphy mode. When the key is released T1804 is off, but T1803 goes on for a time period of approx. 10 mS determinated by the monostable multivibrator T1802 and T1803.

RX-DELAY

With the transmitter keyed there is +18V ON +18V TRIG. keeping T1809 conducting, and is this way the receiver is blocked. When the key is released T1808 is off, but T1807 goes on and stays on for a time period between 8 mS and 30 mS determinated by the monostable multivibrator T1806 and T1807 and adjustable with R1819.

600 kHz LSB ON/OFF

The relay RE1801 switches the signal from the SSB generator to the mixer unit off in receive mode.

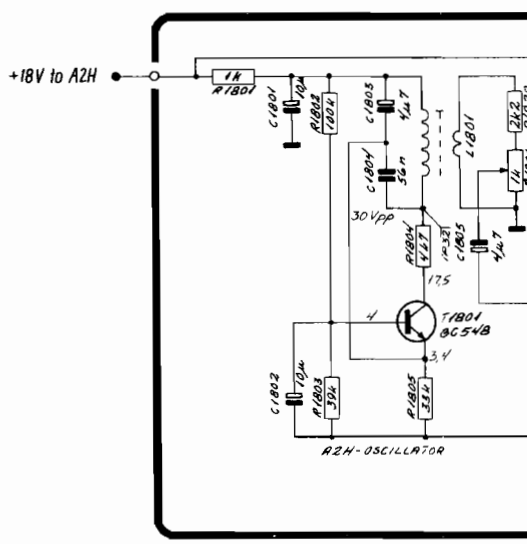

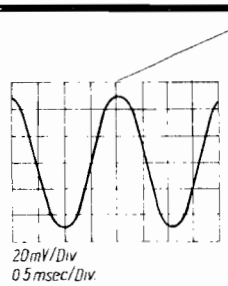

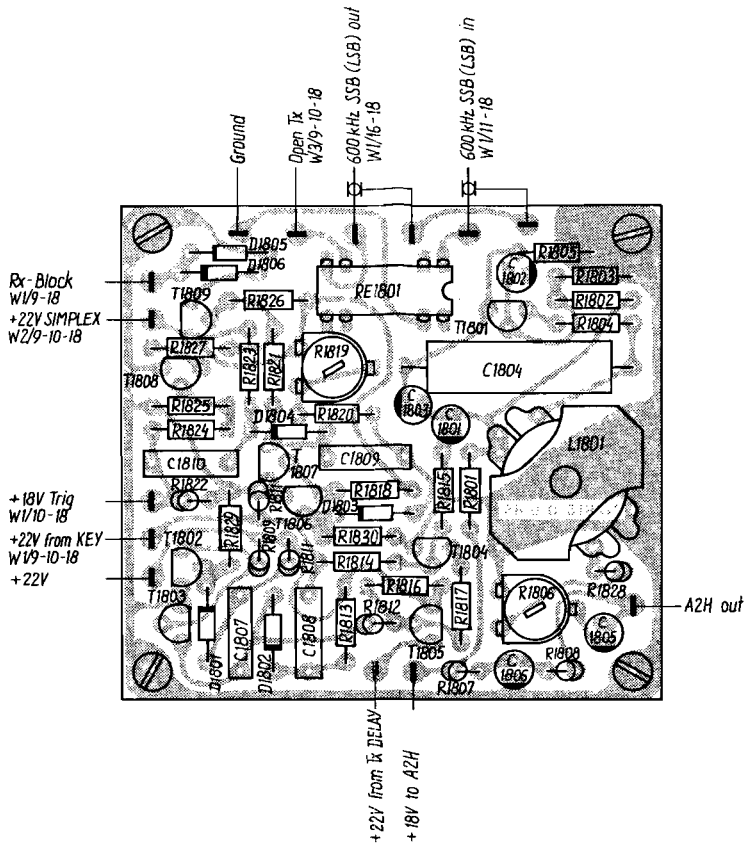

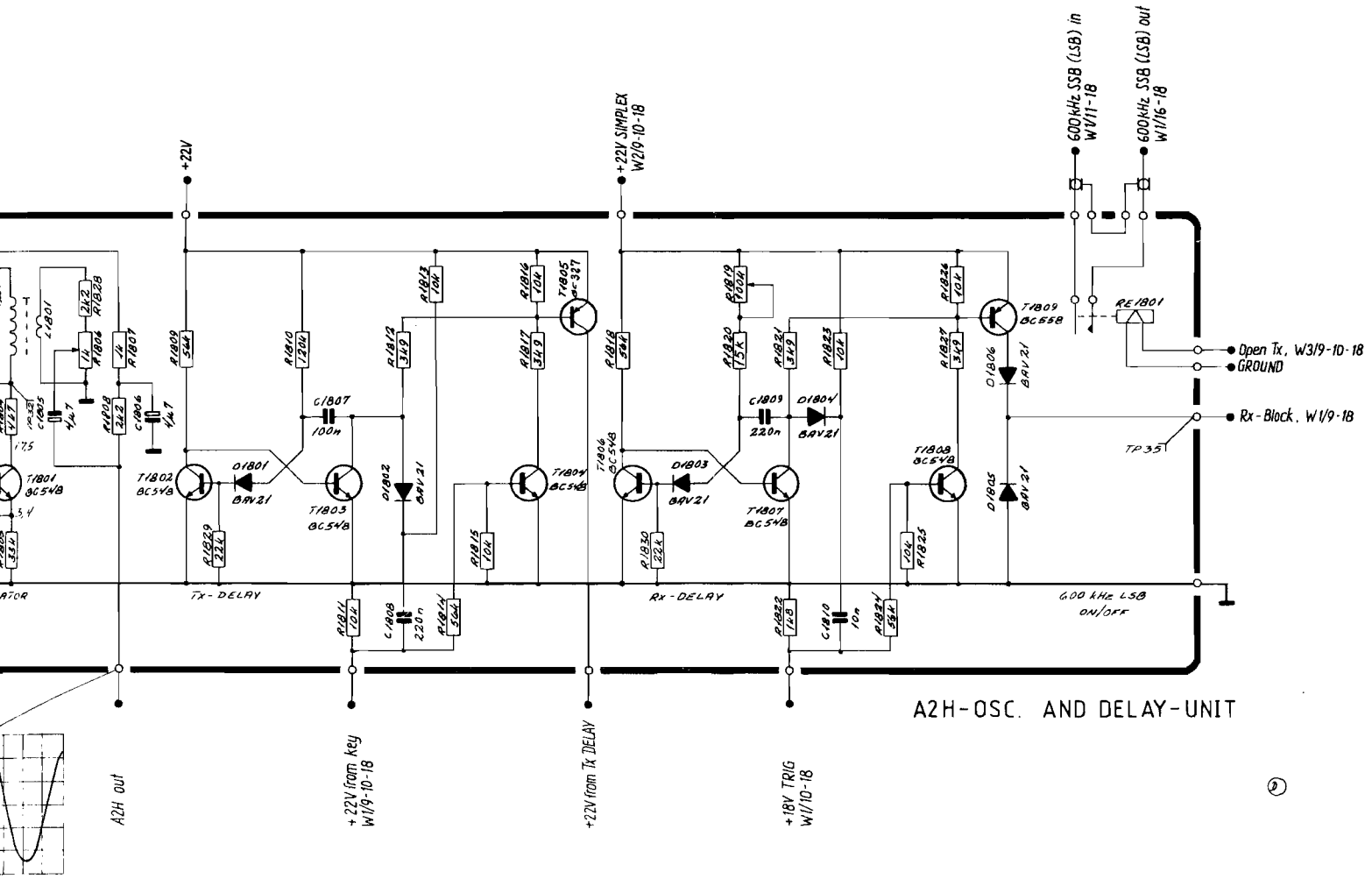

A2H-OSC. AND DELAY-UNIT

CIRCUIT DESCRIPTION POWER SWITCH S1303/04

Transistor T2001 controls the power reduction led, which is alight as soon as the switch S2002 is activated to reduce the power. The Vcc to power lamp information is controlled by the tune information and is 0.0 Volt when tuning.

The transistor T2002 is connected to the dimmer potentiometer and the emitter is connected to the light emitting diodes, EXTERNAL FRQ. CONTROL, the 2182 kHz selected, and the POWER REDUCED.

The trig to clear information is a 5 Volt pulse, which clears the display when the display input switch is activated.

TEST CONDITIONS

Frequency:	EXTERNAL FRQ CONTROL
Power level:	POWER REDUCED (two steps)
Dimmer:	FULL ALIGHT
DC voltmeter input:	10 Mohm

All voltage statements are typical.

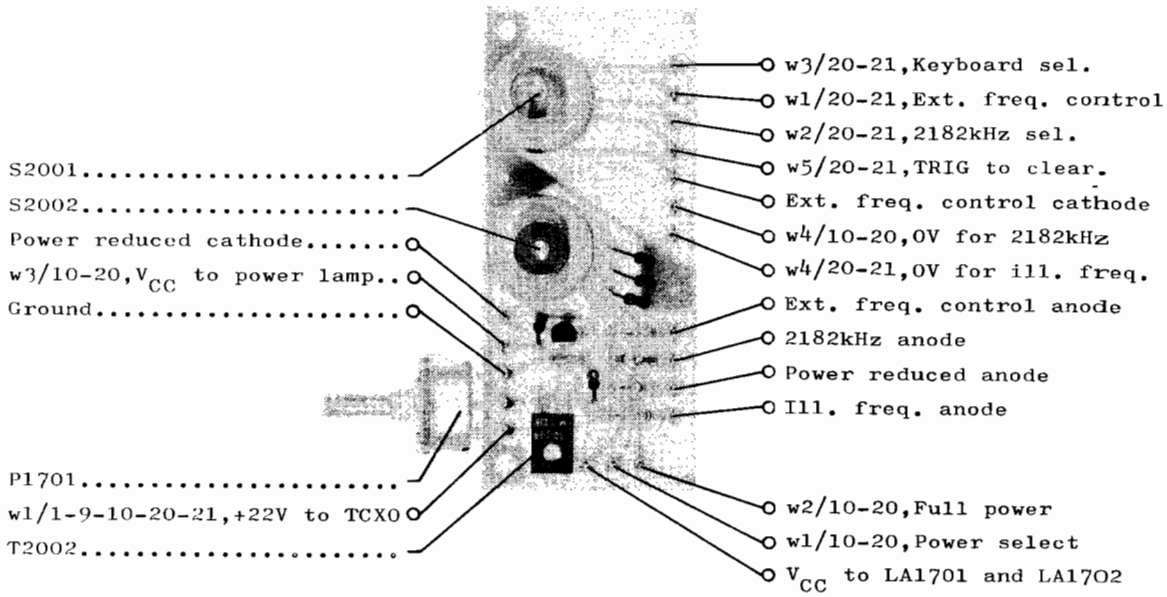

B2/2 S1303/4
4-6-23222B 4-0-23222A

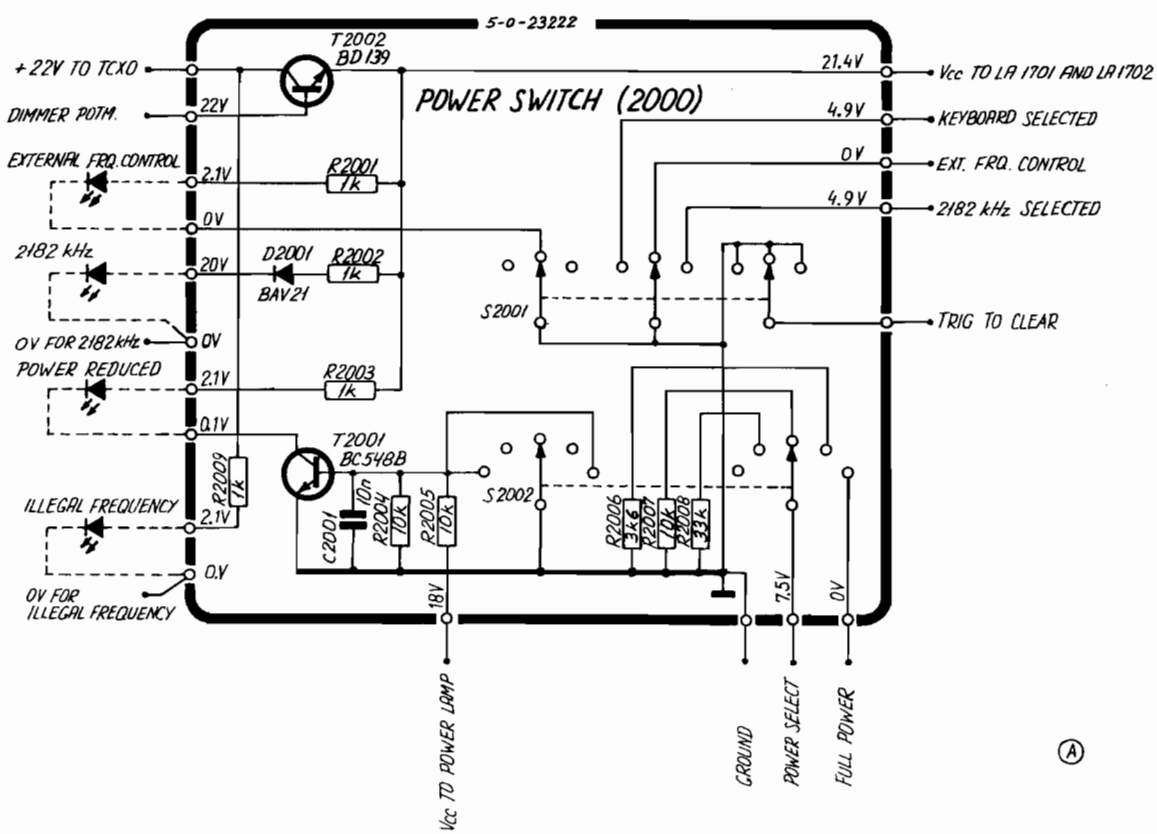

CIRCUIT DESCRIPTION FREQUENCY CONTROL S1303/04

The frequency control unit receives the frequency input from the keyboard (or external equipment) and transfers this input to usable codes for control units in exciter and PA-unit. The frequency information from the keyboard is converted to a six digit BCD-code which is used in the divider unit and by the frequency check unit (S1304). A five bit code (T, V, X, Y, Z) is generated from the three most significant of the six digit BCD-code. With this five bit code the frequency area (1,6 - 28 MHz) is split up in a certain amount of bands. The area 1,6 - 8,5 MHz is covered by 21 codes and the frequency bands 12, 16, 22, 25 and 2182 MHz fixed are allocated one code each. Two codes are used for blocking of the PA-stage (00000, 11111). Since five bits give 32 possible codes, there are four left for special use. The five bit code controls the VCO and bandfilter selection in the exciter. Besides it is used in the PA-stage to control the pre-setting of the aerial coupler. In addition it is used in connection with selection of drive level potentiometer and harmonic filter in the PA-stage.

SUS/A 4-0-23101 A1/9

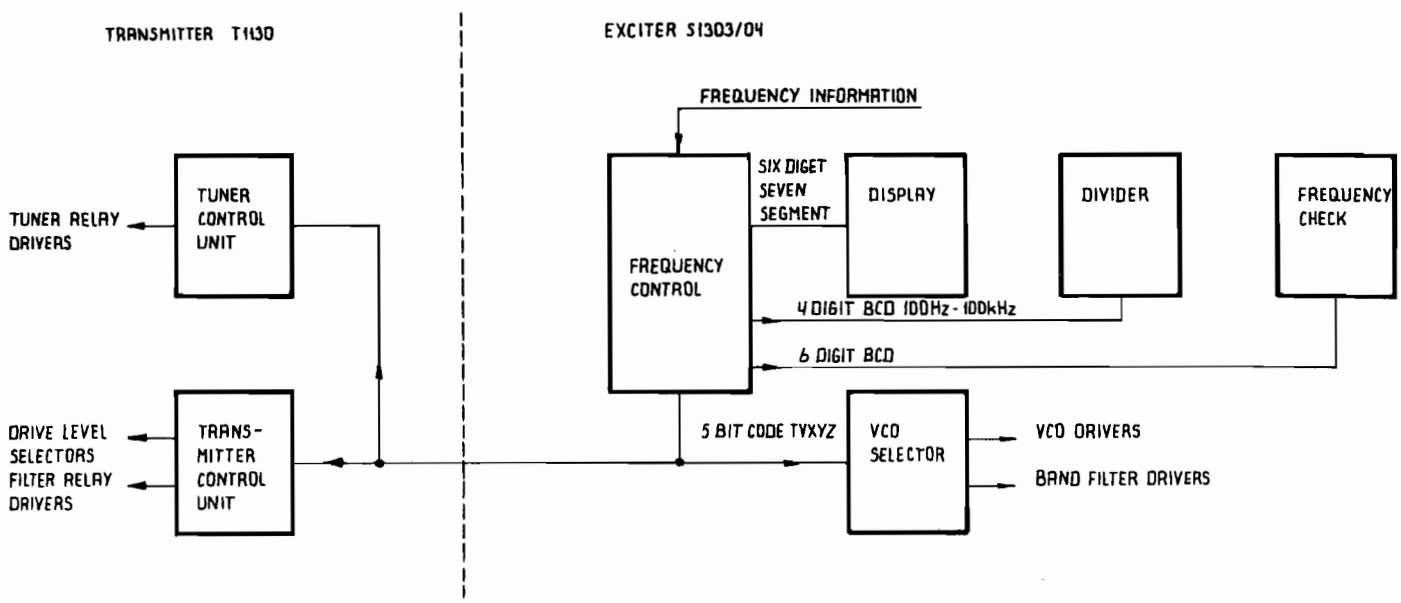

FREQUENCY STORE

The frequency input is stored in six eight bit shift registers IC2107-IC2112, which can be loaded both in parallel and in serial mode, depending on the logic level of the S/L input "0" for parallel mode. The frequency information runs in series into the registers and when the input is finished, the registers are shifted to parallel mode, and now they will be loaded with their own information if any clockpulses come (can occur by activating the keyboard keys).

Read-in begins in the 100 Hz digit and if a new number is keyed in, the former shifts a step to the left in the display and so on. When the point key is activated, a zero is read in on the 100 Hz place, and after this the digits to the left of the point must not be changed by a new key press. This is obtained by putting IC2108-IC2112 in parallel mode by means of IC2129a. A subsequent key press will cause a read-in of the digit into IC2107, besides IC2129b will change state and thereby set IC2107 in parallel mode, which will prevent further input into IC2107 until CLEAR has been activated. A press on the TUNE button will cause the same change of mode for IC2107-IC2112. 22V for TUNE will, via gate 28 and gate 27, cause a zero read into IC2107. Furthermore IC2129b and IC2129a will change state in the mentioned order and thereby set IC2107-IC2112 in parallel mode. When IC2129a is cleared by IC2129b, it will clear IC2126a, which will turn on the point in the display

FREQUENCY INPUT VIA KEYBOARD

The key CLEAR zeroes the register IC2107-IC2112 and sets IC2129a and clears IC2129b so that serial input to IC2107-IC2112 is permitted. A subsequent key press sets up, via IC2119 and IC2120, the BCD-code for the digit in question on the data inputs of IC2121. Simultaneously the monostable FF IC2124b is trigged and after 7 msec (it is assumed that keybounce is over now) it returns and clocks the digit information into IC2121, which is a four bit register. Furthermore the monostable FF IC2124a is trigged by IC2124b and thereby allows the oscillator IC2133d to start. Now the digit information in IC2121 is fetched via IC2122 and clocked into the register IC2107 on the positive edge of the clockpulses. IC2122 is an eight input multiplexer. The output Y_0 is connected to one of the inputs D_1-D_8 of which one is selected with the code on inputs A, B, C. IC2122 is controlled by the counter IC2130 which counts up on the negative edge of the clockpulses to the shift register IC2107. When the counter reaches four it stops the oscillator via IC2127 and IC2131. Later the monostable FI IC2124a returns and clears the counter IC2130. Now the ciruit is ready for another key press. The timing of the keyboard input is shown in fig. 2.

FIG.2

TIMING OF FREQUENCY INPUT VIA KEYBOARD

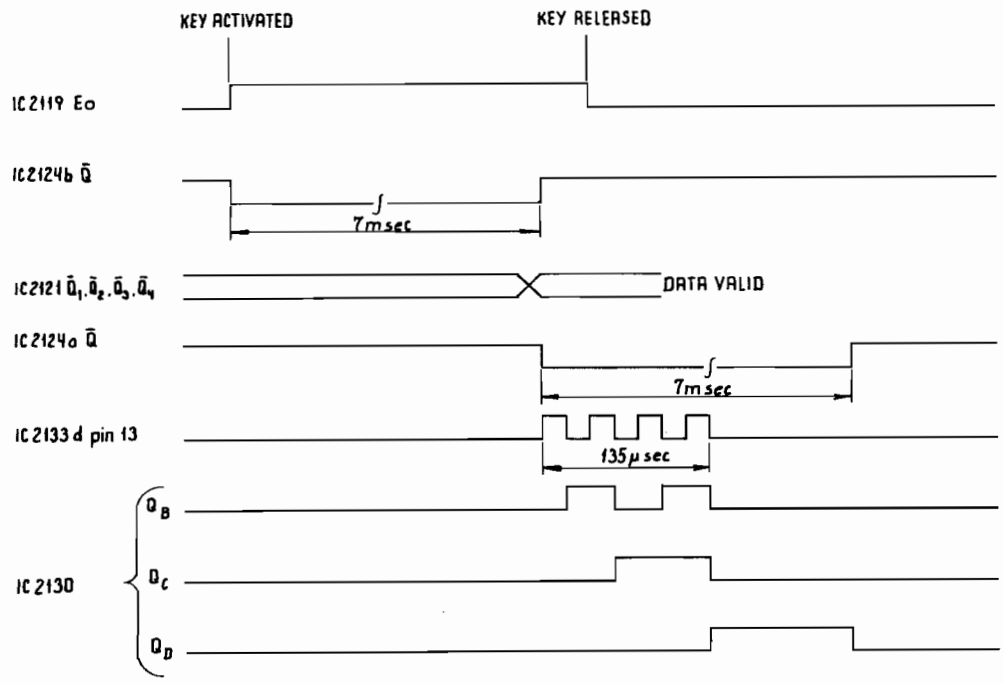

A5/9
5135/4
4-0-25099

FREQUENCY INPUT FROM EXTERNAL EQUIPMENT

The external input mode is obtained when the input EXT. FRQ. CONTROL is grounded. Then IC2129b is cleared and IC2129a is pre-set and hereby the registers IC2107-IC2112 are ready for serial input. The serial data must consist of 24 data bits with corresponding clockpulses. The clock and datapulses are shaped in the Schmidt triggers IC2133b and IC2133a. To avoid disturbance from the keyboard, IC2122 is cleared on pin 7 and IC2124b on pin 11.

At external frequency input the PA-stage is blocked when the first clock-pulse arrives, and when the read-in is over, a tune information is sent to the PA-stage, if the HTON input is held on 22V. If HTON is low at the end of a read-in the transmitter will not tune automatically, but now it will tune when HTON is turned on 22V. The circuit which handles the above-mentioned events consists of IC2125a, IC2125b and surrounding components. The actual timing of transmitter blocking and tuning is shown in fig. 3.

FIG.3

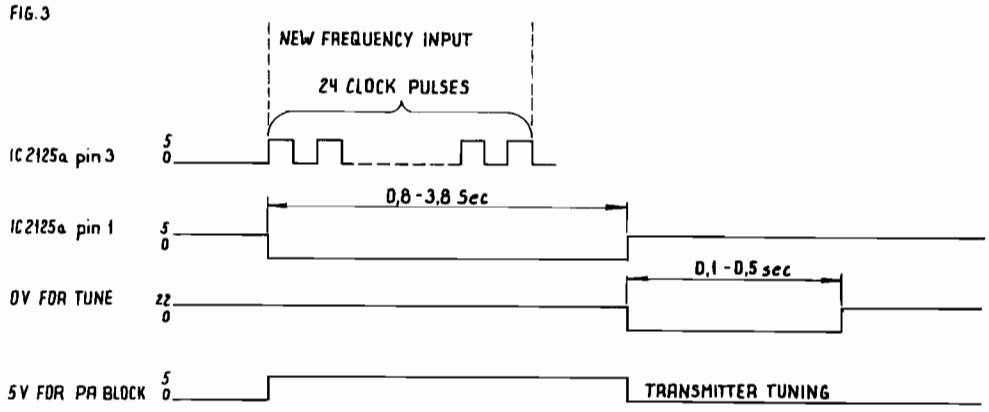

THE SHOWN DIAGRAM IS ONLY VALID IF HT ON = 22V AND EXTERNAL FREQUENCY INPUT IS SELECTED WHICH CAUSE IC2125a's pin5 ON 0V.

GENERATION OF THE FIVE BIT CODE (T, V, X, Y, Z)

The five bit code is programmed in the PROMs IC2114 and IC2115. The frequency information from 10 MHz, 1 MHz and 100 kHz digits is used to address one of the two PROMs. In this way it is possible to change band code in 100 kHz steps. The 10 MHz and 1 MHz BCD-codes are in a BCD to binary converter IC2216 and IC2118 transformed to a binary code which addresses the PROMs, besides this circuit selects the PROM which has to be active. The BCD to binary conversion takes place in an adder IC2116. A fixed figure (depending on 10 MHz input) on the B-input of the adder is added to the 1 MHz input on the A-input. This results in a binary representation of the BCD-digits at 10 and 1 MHz. The used figures on input B are shown in table 1. To 2182 kHz fixed corresponds a special band code which is obtained by turning high the address inputs A_2 and A_3 on IC2114 and IC2115.

Additionally the PROMs contain a blocking possibility for the PA-stage with 100 kHz steps. To block the transmitter it is necessary to programme a "1" in the output 1 on the desired 100 kHz steps. The blocking takes place via T2105 and T2101.

TABLE 1

FREQUENCY	$B_4B_3B_2B_1$	B-Input on ADDER IC2116
$0 \leq f < 10$ MHz	0 0 0 0	IC2115 selected
$10 \leq f < 20$ MHz	1 0 1 0	IC2114 selected
$20 \leq f < 30$ MHz	0 1 0 0	

DISPLAY DRIVER

The display is a LCD display which demands an alternating voltage across every segment. A segment is turned on if the alternating voltage on the back-plane is out of phase with the alternating voltage on the segment in question, and the segment is off if the voltages are in phase. The oscillator IC2133c runs at 100 Hz which is divided by two in IC2126b. The 50 Hz signal is led to the backplane driver 3/4 IC2132 via a level shifter T2112. Additionally the 50 Hz signal is used in the segment drivers IC2101-IC2106 which converts the BCD-input to a seven segment code, and with an alternating output voltage for the LCD segments. The point in the display is driven from 1/4 IC2132 and the state of it (ON/OFF) is established by IC2126a. Depending of the logic state on pin 13 of IC2123 the exclusive - or gate acts as an inverter or a non-inverter and hereby turns the point on or off.

PROM CODES

The standard prom codes in IC2114 and IC2115 placed on the frequency control board (2100) is as illustrated below. The illustration is in Hexadecimal code, a convertion table is illustrated below.

Addresses	0	1	2	3	4	5	6	7	8	9	A	B	C	D	E	F	Frequency range
0000	FF	FF	FF	FF	FF	FF	FF	FF	FF	FF	EE	EE	EE	EE	EE	EE	0.0 - 0.9 MHz
0010	FF	FF	FF	FF	FF	FF	CA	CA	AE	AE	EE	EE	EE	EE	EE	EE	1.0 - 1.9 MHz
0020	F6	F6	BE	BE	BA	BA	DE	DE	9E	9E	EE	EE	EE	EE	EE	EE	2.0 - 2.9 MHz
0030	EA	AA	AA	AA	CE	CE	CE	8E	8E	8E	EE	EE	EE	EE	EE	EE	3.0 - 3.9 MHz
0040	DA	DA	DA	9B	9B	9B	FB	FB	FB	FB	EE	EE	EE	EE	EE	EE	4.0 - 4.9 MHz
0050	A3	A3	A3	A3	A3	8B	8B	8B	8B	8B	EE	EE	EE	EE	EE	EE	5.0 - 5.9 MHz
0060	B7	B7	B6	B6	F3	F3	F3	F3	F3	F3	EE	EE	EE	EE	EE	EE	6.0 - 6.9 MHz
0070	E7	E7	E7	E7	E7	E7	A7	A7	A7	A7	EE	EE	EE	EE	EE	EE	7.0 - 7.9 MHz
0080	B3	B2	B2	B2	B2	FF	FF	FF	FF	FF	EE	EE	EE	EE	EE	EE	8.0 - 8.9 MHz
0090	FF	FF	FF	FF	FF	FF	FF	FF	FF	FF	EE	EE	EE	EE	EE	EE	9.0 - 9.9 MHz
00A0	FF	FF	FF	FF	FF	FF	FF	FF	FF	FF	EE	EE	EE	EE	EE	EE	10.0 - 10.9 MHz
00B0	FF	FF	FF	FF	FF	FF	FF	FF	FF	FF	EE	EE	EE	EE	EE	EE	11.0 - 11.9 MHz
00C0	FF	FF	FF	D6	D6	D6	D6	FF	FF	FF	EE	EE	EE	EE	EE	EE	12.0 - 12.9 MHz
00D0	FF	FF	FF	FF	FF	FF	FF	FF	FF	FF	EE	EE	EE	EE	EE	EE	13.0 - 13.9 MHz
00E0	FF	FF	FF	FF	FF	FF	FF	FF	FF	FF	EE	EE	EE	EE	EE	EE	14.0 - 14.9 MHz
00F0	FF	FF	FF	FF	FF	FF	FF	FF	FF	FF	EE	EE	EE	EE	EE	EE	15.0 - 15.9 MHz
	IC2115 Module 2100 $ E73F																

Addresses	0	1	2	3	4	5	6	7	8	9	A	B	C	D	E	F	Frequency range
0000	FF	FF	FF	FF	96	96	96	96	96	FF	EE	EE	EE	EE	EE	EE	16.0 - 16.9 MHz
0010	FF	FF	FF	FF	FF	FF	FF	FF	FF	FF	EE	EE	EE	EE	EE	EE	17.0 - 17.9 MHz
0020	FF	FF	FF	FF	FF	FF	FF	FF	FF	FF	EE	EE	EE	EE	EE	EE	18.0 - 18.9 MHz
0030	FF	FF	FF	FF	FF	FF	FF	FF	FF	FF	EE	EE	EE	EE	EE	EE	19.0 - 19.9 MHz
0040	FF	FF	FF	FF	FF	FF	FF	FF	FF	FF	EE	EE	EE	EE	EE	EE	20.0 - 20.9 MHz
0050	FF	FF	FF	FF	FF	FF	FF	FF	FF	FF	EE	EE	EE	EE	EE	EE	21.0 - 21.9 MHz
0060	D2	D2	D2	D2	FF	FF	FF	FF	FF	FF	EE	EE	EE	EE	EE	EE	22.0 - 22.9 MHz
0070	FF	FF	FF	FF	FF	FF	FF	FF	FF	FF	EE	EE	EE	EE	EE	EE	23.0 - 23.9 MHz
0080	FF	FF	FF	FF	FF	FF	FF	FF	FF	FF	EE	EE	EE	EE	EE	EE	24.0 - 24.9 MHz
0090	E2	E2	FF	FF	FF	FF	FF	FF	FF	FF	EE	EE	EE	EE	EE	EE	25.0 - 25.9 MHz
00A0	FF	FF	FF	FF	FF	FF	FF	FF	FF	FF	EE	EE	EE	EE	EE	EE	26.0 - 26.9 MHz
00B0	FF	FF	FF	FF	FF	FF	FF	FF	FF	FF	EE	EE	EE	EE	EE	EE	27.0 - 27.9 MHz
00C0	FF	FF	FF	FF	FF	FF	FF	FF	FF	FF	EE	EE	EE	EE	EE	EE	28.0 - 28.9 MHz
00D0	FF	FF	FF	FF	FF	FF	FF	FF	FF	FF	EE	EE	EE	EE	EE	EE	
00E0	FF	FF	FF	FF	FF	FF	FF	FF	FF	FF	EE	EE	EE	EE	EE	EE	
00F0	FF	FF	FF	FF	FF	FF	FF	FF	FF	FF	EE	EE	EE	EE	EE	EE	
	IC2114 Module 2100 $ F5A5																

PROM CODES

Convertion Table.

Decimal	0	1	2	3	4	5	6	7
Binary	0000	0001	0010	0011	0100	0101	0110	0111
Hex	0	1	2	3	4	5	6	7
Decimal	8	9	10	11	12	13	14	15
Binary	1000	1001	1010	1011	1100	1101	1110	1111
Hex	8	9	A	B	C	D	E	F

The prom output code is fed to the VCO selector board (module 700) and the output bit O_1 is used to block the transmitter when a frequency outside the allowed transmitting bands is keyed into the display.

The transmitter block information can be changed by programming a new prom where the prom output O_1 is changed from "1" to "0" on the frequency addresses where it is wanted to use the transmitter.

With a standard prom the transmitter is blocked in the frequency range 4.3 - 6.1, 6.4 - 8.0 MHz. To override this block information a new prom IC2115 shall be programmed as illustrated below.

Addresses	0 1 2 3 4 5 6 7 8 9 A B C D E F	Frequency range
0000	FF FF FF FF FF FF FF FF FF FF EE EE EE EE EE EE	0.0 - 0.9 MHz
0010	FF FF FF FF FF FF CA CA AE AE EE EE EE EE EE EE	1.0 - 1.9 MHz
0020	F6 F6 BE BE BA BA DE DE 9E 9E EE EE EE EE EE EE	2.0 - 2.9 MHz
0030	EA AA AA AA CE CE CE 8E 8E 8E EE EE EE EE EE EE	3.0 - 3.9 MHz
0040	DA DA DA 9A 9A 9A FA FA FA FA EE EE EE EE EE EE	4.0 - 4.9 MHz
0050	A2 A2 A2 A2 A2 8A 8A 8A 8A 8A EE EE EE EE EE EE	5.0 - 5.9 MHz
0060	B6 B6 B6 B6 F2 F2 F2 F2 F2 F2 EE EE EE EE EE EE	6.0 - 6.9 MHz
0070	E6 E6 E6 E6 E6 E6 A6 A6 A6 A6 EE EE EE EE EE EE	7.0 - 7.9 MHz
0080	B2 B2 B2 B2 B2 FF FF FF FF FF EE EE EE EE EE EE	8.0 - 8.9 MHz
0090	FF FF FF FF FF FF FF FF FF FF EE EE EE EE EE EE	9.0 - 9.9 MHz
00A0	FF FF FF FF FF FF FF FF FF FF EE EE EE EE EE EE	10.0 - 10.9 MHz
00B0	FF FF FF FF FF FF FF FF FF FF EE EE EE EE EE EE	11.0 - 11.9 MHz
00C0	FF FF FF D6 D6 D6 D6 FF FF FF EE EE EE EE EE EE	12.0 - 12.9 MHz
00D0	FF FF FF FF FF FF FF FF FF FF EE EE EE EE EE EE	13.0 - 13.9 MHz
00E0	FF FF FF FF FF FF FF FF FF FF EE EE EE EE EE EE	14.0 - 14.9 MHz
00F0	FF FF FF FF FF FF FF FF FF FF EE EE EE EE EE EE	15.0 - 15.9 MHz
	IC2115 Module 2100 $ E71B	

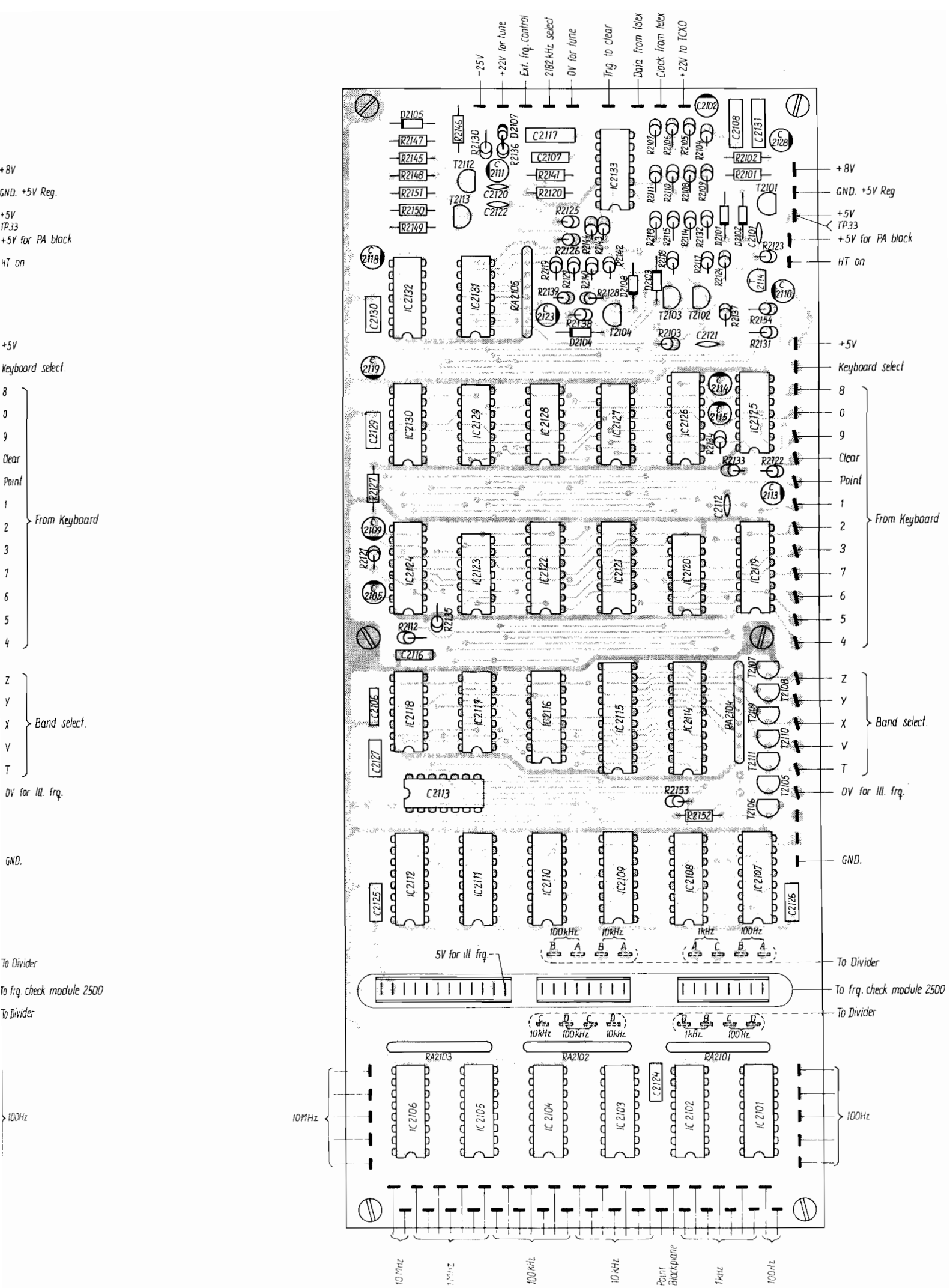
-25V
+22V for tune
Ext. frq. control
2182 kHz select
0V for tune
Trig. to clear
Data from telex
Clock from telex
+22V to TCXO
+8V
GND. +5V Reg.
+5V
TP33
+5V for PA block
HT on
+5V
Keyboard select
8
0
9
Clear
Point
1
2
3
7
6
5
4
From Keyboard
Z
Y
X
V
T
Band select.
0V for ill. frq.
GND.
To Divider
To frq. check module 2500
To Divider
100Hz
10MHz
5V for ill frq.
100kHz
10kHz
1kHz
100Hz
RA2103
RA2102
RA2101
IC2106
IC2105
IC2104
IC2103
IC2102
IC2101
IC2112
IC2111
IC2110
IC2109
IC2108
IC2107
IC2118
IC2117
IC2116
IC2115
IC2114
IC2113
IC2124
IC2123
IC2122
IC2121
IC2120
IC2119
IC2130
IC2129
IC2128
IC2127
IC2126
IC2125
IC2132
IC2131
RA2105
RA2104
T2112
T2113
T2101
T2102
T2103
T2104
T2105
T2106
T2107
T2108
T2109
T2110
T2111
D2105
D2107
D2104
D2108
C2117
C2107
C2120
C2122
C2133
C2102
C2108
C2131
C2128
C2130
C2129
C2127
C2106
C2125
C2126
C2116
C2113
C2112
C2121
C2101
C2110
C2114
C2115
C2123
C2118
C2119
C2109
C2105
R2146
R2147
R2145
R2148
R2151
R2150
R2149
R2130
R2136
R2125
R2126
R2144
R2143
R2142
R2139
R2128
R2138
R2103
R2154
R2131
R2123
R2122
R2133
R2134
R2135
R2112
R2153
R2152
R2107
R2106
R2105
R2104
R2111
R2110
R2108
R2109
R2113
R2115
R2114
R2132
R2101
R2102
R2116
R2117
R2124
R2127
R2121
Point
Blackplane
1kHz
100Hz
Seen from component side with upper side tracks

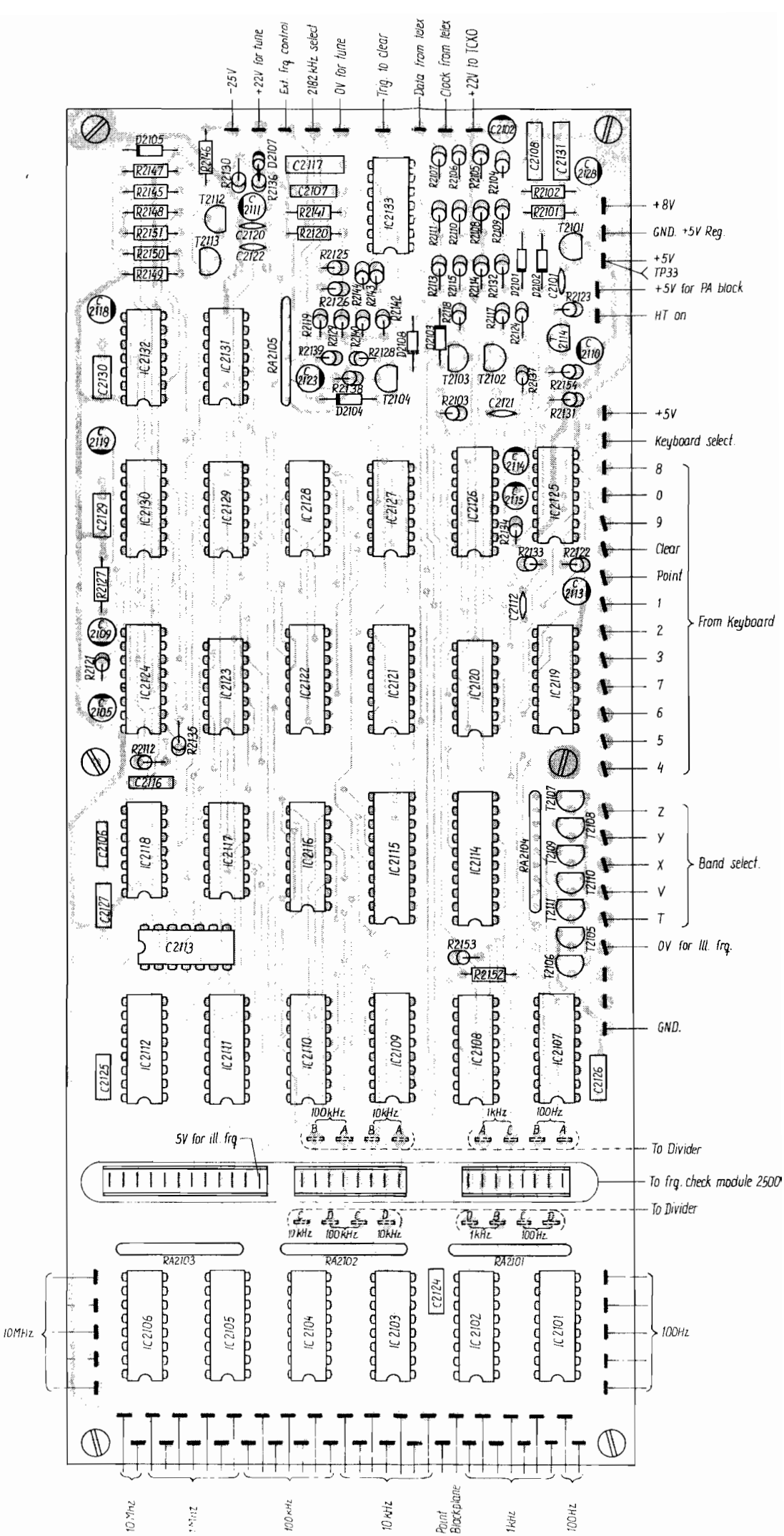

Seen from component side with lower side tracks

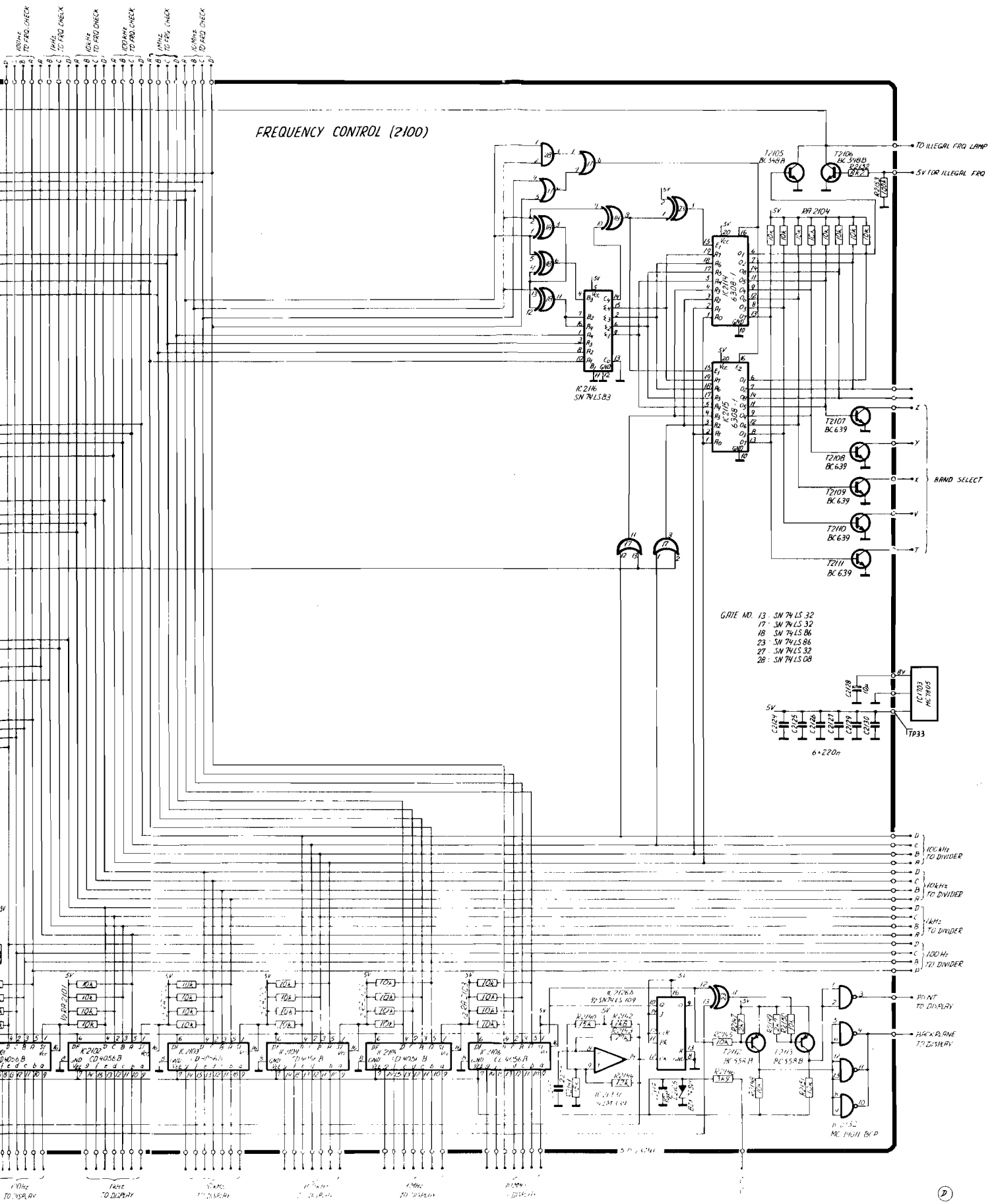
FREQUENCY CONTROL (2100)
TO ILLEGAL FRQ LAMP
5V FOR ILLEGAL FRQ
BAND SELECT
GATE NO. 13 : SN 74 LS 32
17 : SN 74 LS 32
18 : SN 74 LS 86
23 : SN 74 LS 86
27 : SN 74 LS 32
28 : SN 74 LS 08
6 × 220n
100 kHz TO DIVIDER
10 kHz TO DIVIDER
1 kHz TO DIVIDER
100 Hz TO DIVIDER
POINT TO DISPLAY
BACK PLANE TO DISPLAY
100 Hz TO DISPLAY
1 kHz TO DISPLAY

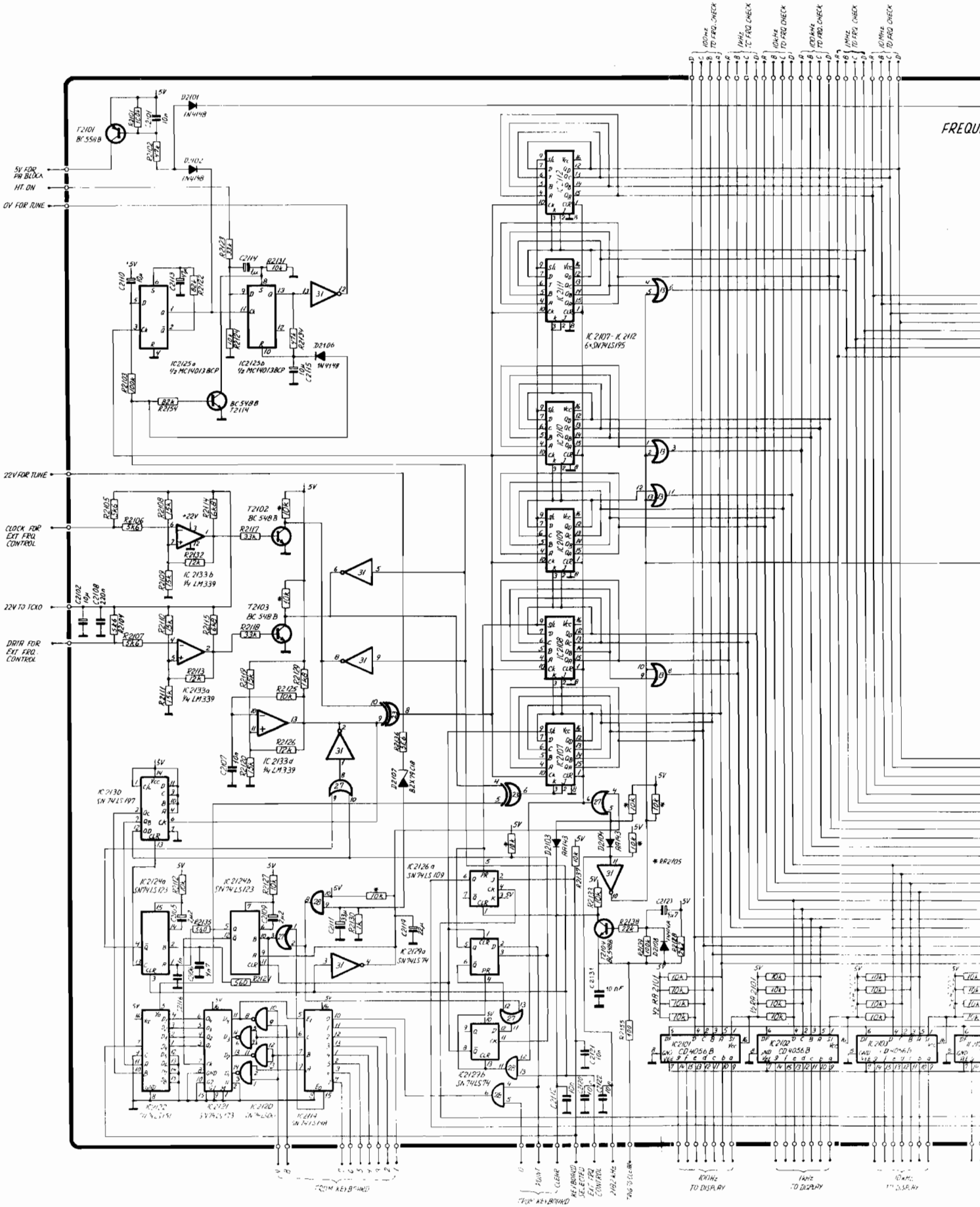

FREQU
5V FOR PA BLOCK
HT. ON
0V FOR TUNE
22V FOR TUNE
CLOCK FOR EXT FRQ CONTROL
22V TO TCXO
DATA FOR EXT FRQ. CONTROL
IC 2107 - IC 2112 6×SN74LS195
IC 2125a 1/2 MC14013BCP
IC 2125b 1/2 MC14013BCP
IC 2133a 1/4 LM339
IC 2133b 1/4 LM339
IC 2133d 1/4 LM339
IC 2130 SN74LS197
IC 2124a SN74LS123
IC 2124b SN74LS123
IC 2126a SN74LS109
IC 2129a SN74LS74
IC 2129b SN74LS74
IC 2101 CD4056B
IC 2102 CD4056B
IC 2103 CD4056B
100Hz TO FRQ. CHECK
1kHz TO FRQ. CHECK
10kHz TO FRQ. CHECK
100kHz TO FRQ. CHECK
1MHz TO FRQ. CHECK
10MHz TO FRQ. CHECK
FROM KEYBOARD
FROM KEYBOARD
100Hz TO DISPLAY
1kHz TO DISPLAY
10kHz TO DISPLAY

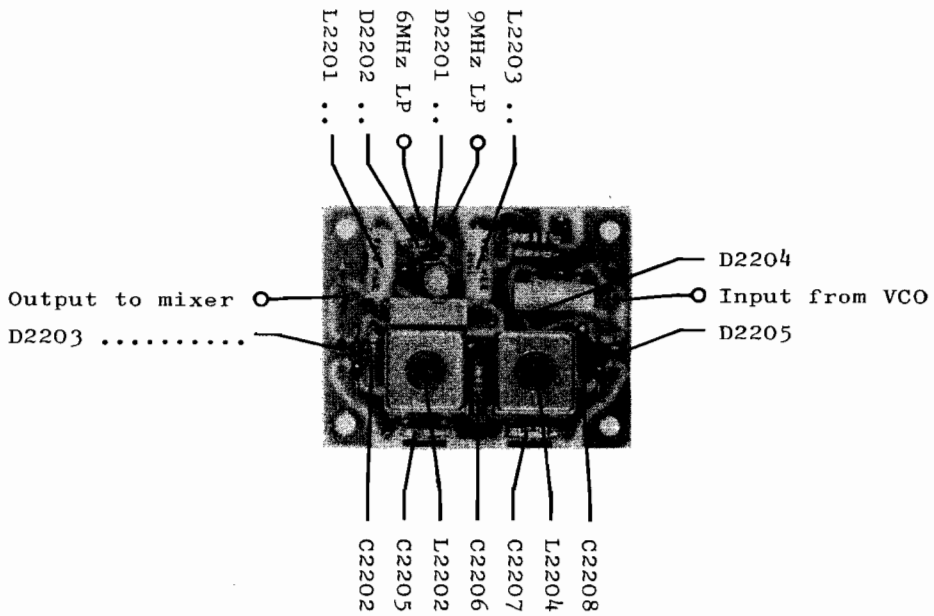
L2201 ..
D2202 ..
6MHz LP
D2201 ..
9MHz LP
L2203 ..
Output to mixer
D2203 .....
D2204
Input from VCO
D2205
C2202
C2205
L2202
C2206
C2207
L2204
C2208

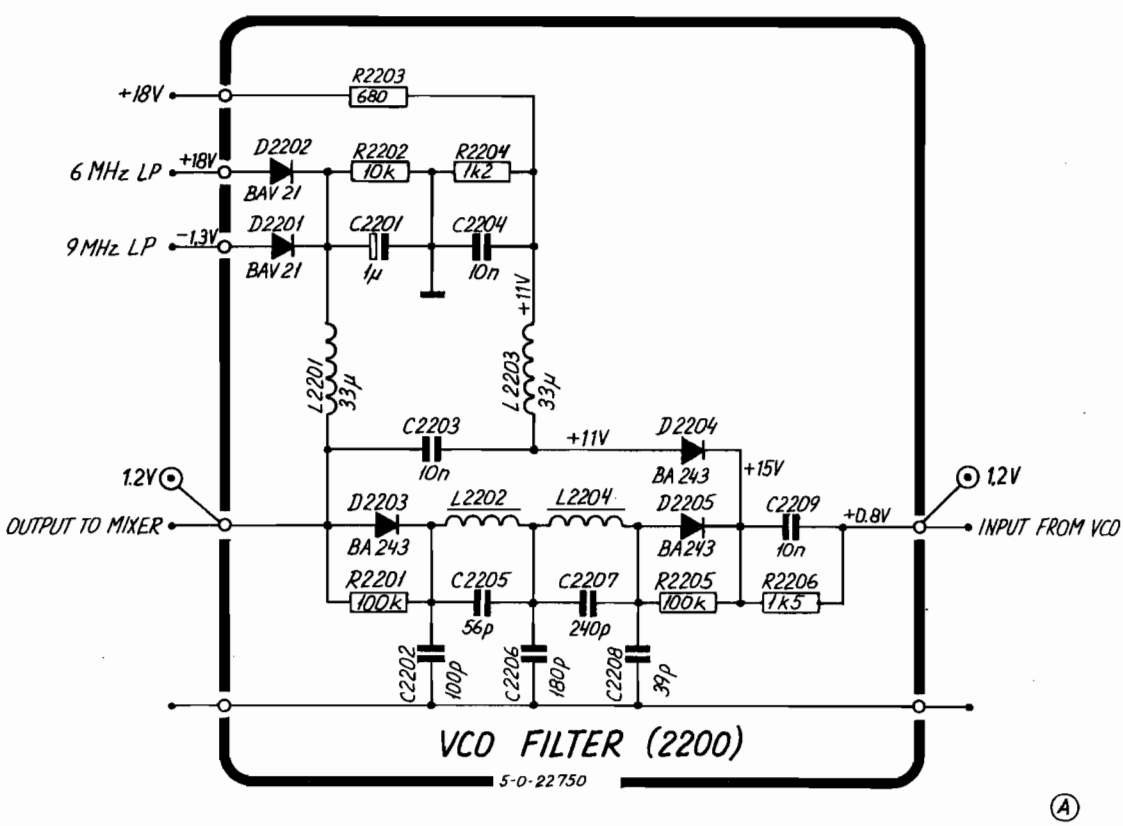
+18V
R2203
680
6 MHz LP
+18V
D2202
BAV 21
R2202
10k
R2204
1k2
9 MHz LP
-1,3V
D2201
BAV 21
C2201
1µ
C2204
10n
+11V
L2201
33µ
L2203
33µ
C2203
10n
+11V
D2204
BA 243
+15V
1.2V
OUTPUT TO MIXER
D2203
BA 243
L2202
L2204
D2205
BA243
C2209
10n
+0.8V
1.2V
INPUT FROM VCO
R2201
100k
C2205
56p
C2207
240p
R2205
100k
R2206
1k5
C2202
100p
C2206
180p
C2208
36p
VCO FILTER (2200)
5-0-22750
A

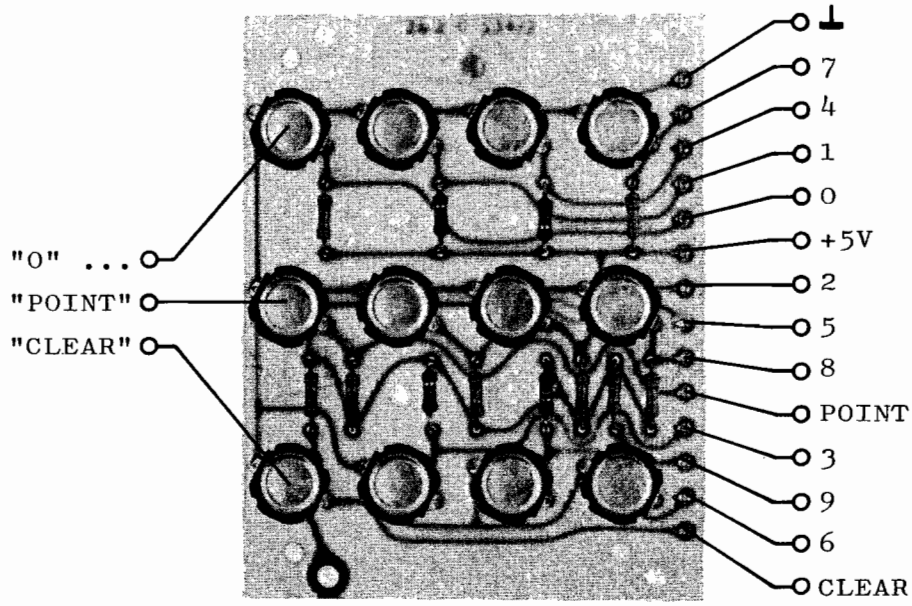

A S1303/4
4-0-22413

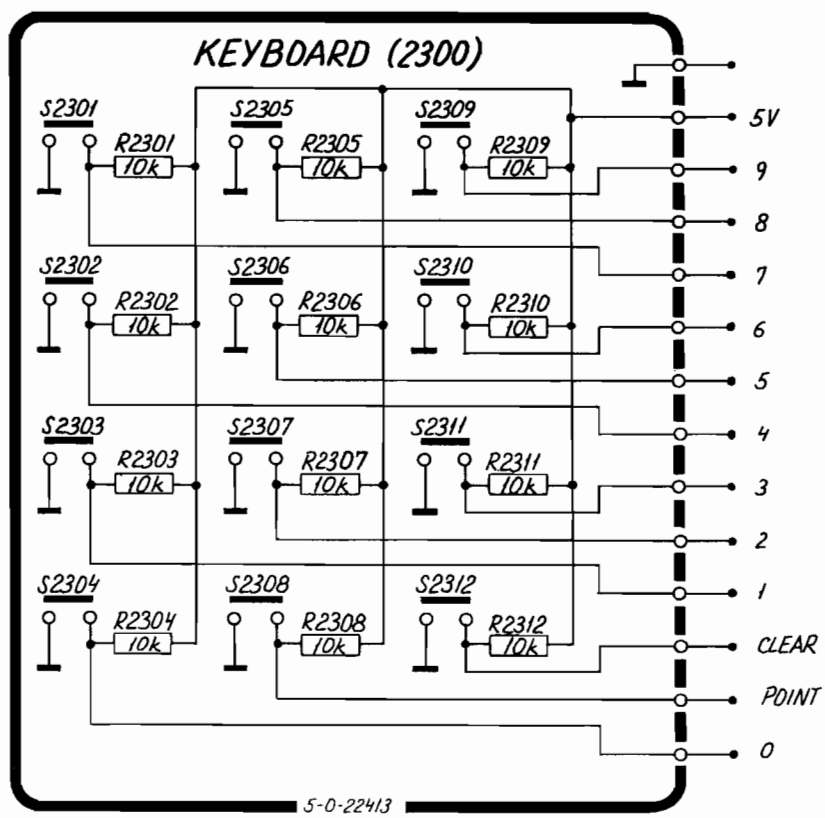

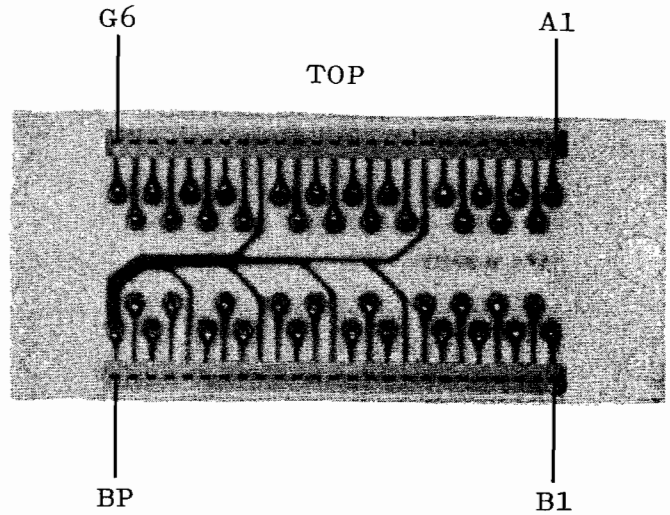
G6
A1
TOP
BP
B1

4-0-22415

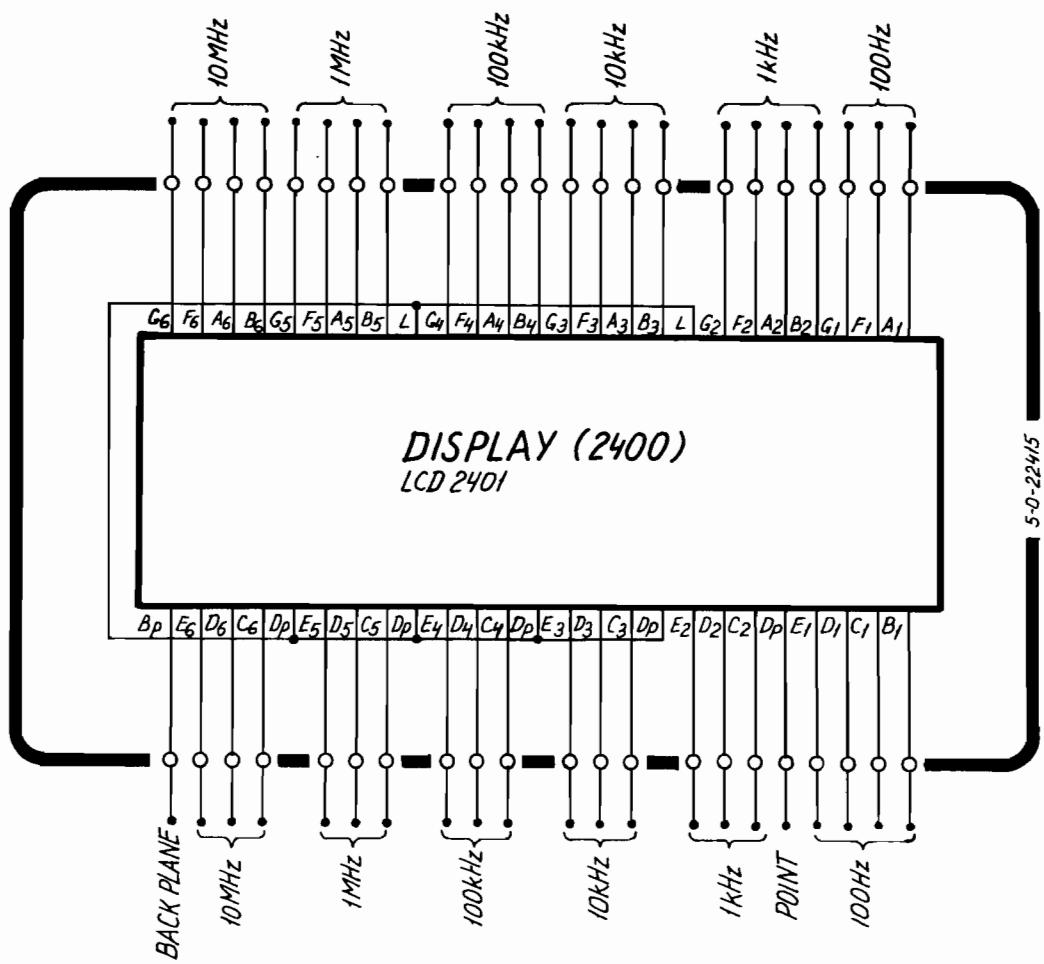
10MHz
1MHz
100kHz
10kHz
1kHz
100Hz
G6 F6 A6 B6 G5 F5 A5 B5 L C4 F4 A4 B4 G3 F3 A3 B3 L G2 F2 A2 B2 G1 F1 A1
DISPLAY (2400)
LCD 2401
Bp E6 D6 C6 Dp E5 D5 C5 Dp E4 D4 C4 Dp E3 D3 C3 Dp E2 D2 C2 Dp E1 D1 C1 B1
BACK PLANE
10MHz
1MHz
100kHz
10kHz
1kHz
POINT
100Hz
5-0-22415

CIRCUIT DESCRIPTION FREQUENCY CHECK S1304

The frequency check unit receives the frequency information from the frequency control unit as six digits in BCD code. This frequency is compared to 256 programmable frequencies which are contained in 3 proms IC2508, IC2510, and IC2512. By a positive comparison a "0" at the output "5V FOR ILLEGAL FREQUENCY" will unblock the PA stage via the frequency control unit.

The comparison takes place in 6 comparators (IC2501 - IC2506) with the actual frequency at the B inputs and the prom outputs at the A inputs. If A = B the output "A = B out" will be "1".

When seeking for frequency coincidence, the addresses in the proms are stepped through by the counters IC2509 and IC2511. The counters receive the clock pulses from the oscillator IC2502 and it is running until an address with frequency coincidence is found. Then the oscillator is stopped when T2501 is turned on by the "1" from IC2501 pin 6.

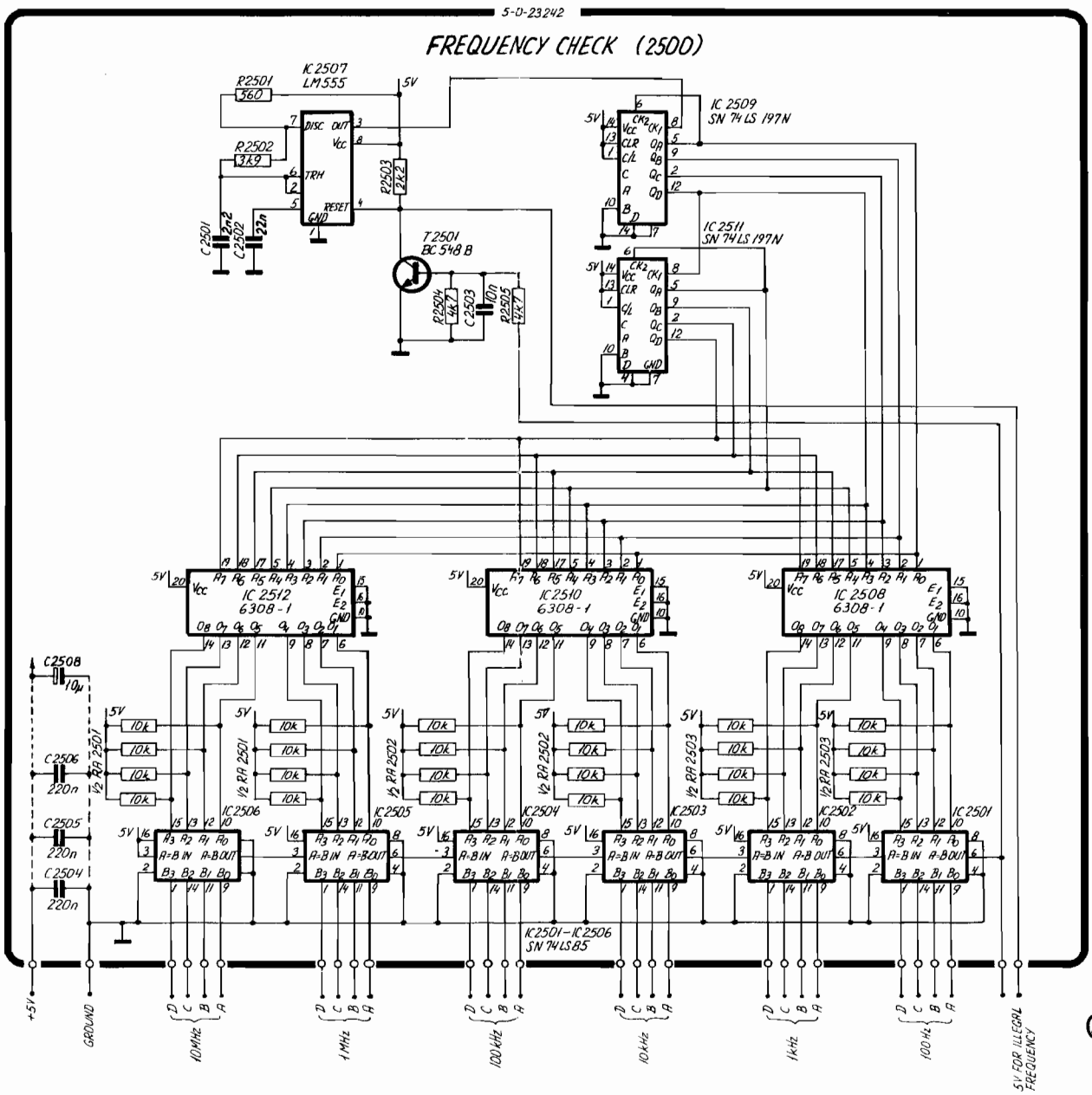
5-0-23242
FREQUENCY CHECK (2500)
IC 2507
LM555
R2501
560
R2502
3k9
R2503
2k2
C2501
2n2
C2502
22n
T2501
BC 548 B
R2504
4k7
C2503
10n
R2505
4k7
IC 2509
SN 74 LS 197N
IC 2511
SN 74LS 197N
IC 2512
6308-1
IC 2510
6308-1
IC 2508
6308-1
C2508
10µ
C2506
220n
C2505
220n
C2504
220n
RA 2501
RA 2502
RA 2503
10k
IC2506
IC2505
IC2504
IC2503
IC2502
IC2501
IC2501-IC2506
SN 74LS85
+5V
GROUND
10MHz
1MHz
100kHz
10kHz
1kHz
100Hz
5V FOR ILLEGAL FREQUENCY
A

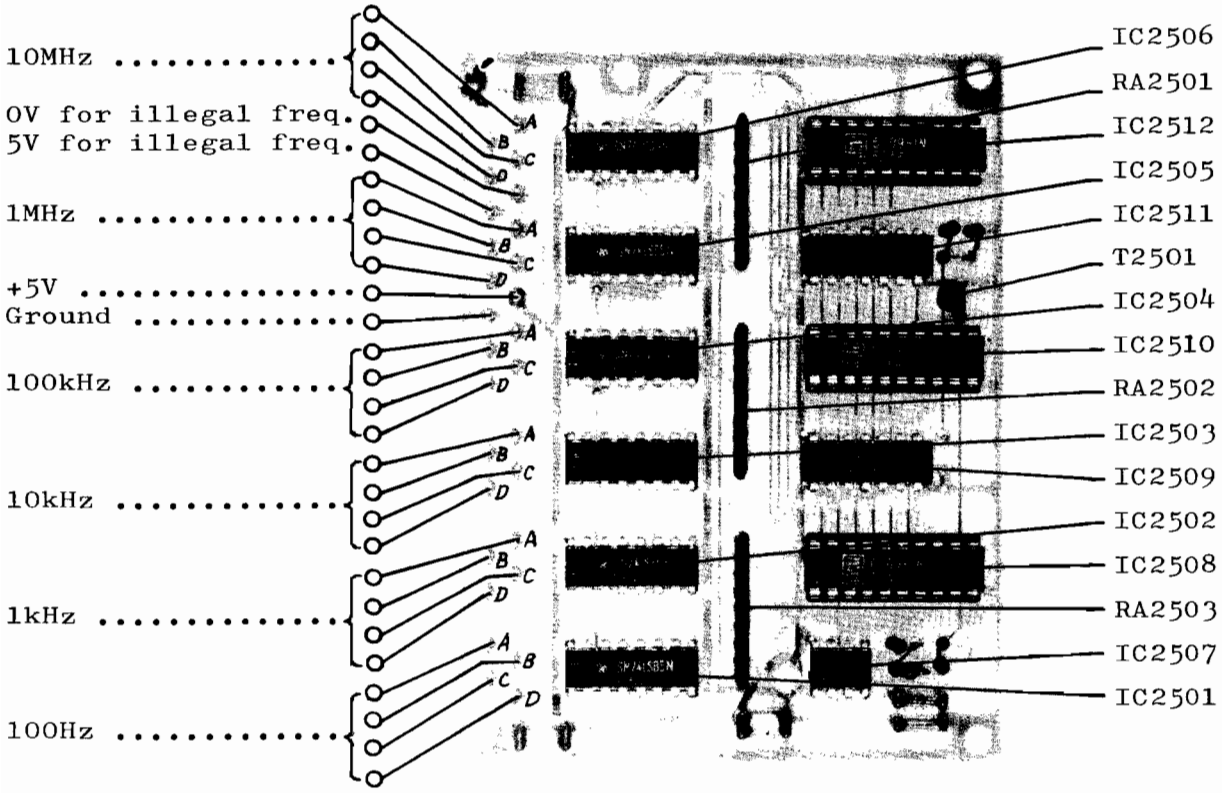
10MHz
0V for illegal freq.
5V for illegal freq.
1MHz
+5V
Ground
100kHz
10kHz
1kHz
100Hz
A
B
C
D
IC2506
RA2501
IC2512
IC2505
IC2511
T2501
IC2504
IC2510
RA2502
IC2503
IC2509
IC2502
IC2508
RA2503
IC2507
IC2501

0V for Alarm
To mic. amplifier
Microphone in
A3H
A3A
+18V
Ground
A3J
A2H
22V to test tone
Test tone out
22V from dummy
0V for PA block
5V for PA block
Vcc to power lamp
0V for 2182 kHz
A3J
A3A
A3H
To SSB generator
A1
Fixed power
Power select
Full power
22V for tune
+22V
0V for tune
RE 1002
RE 1004
IC 1001
S1001 A
S1001 B
S1001 C
S1001 D
S1001 E
S1001 F
S1001 G
TELEX
A2H
A1
A3H
A3A
A3J
TEST ALARM

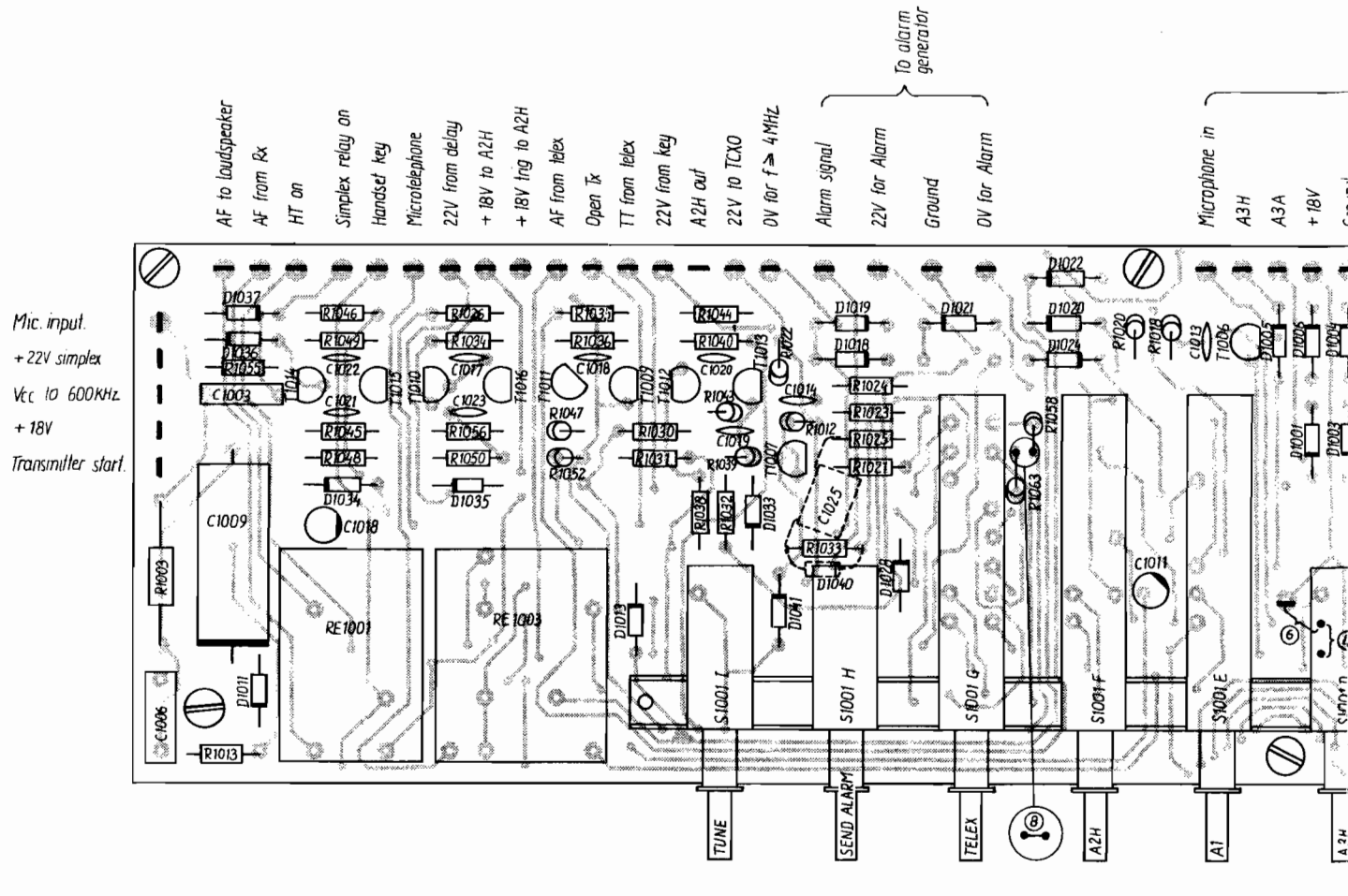

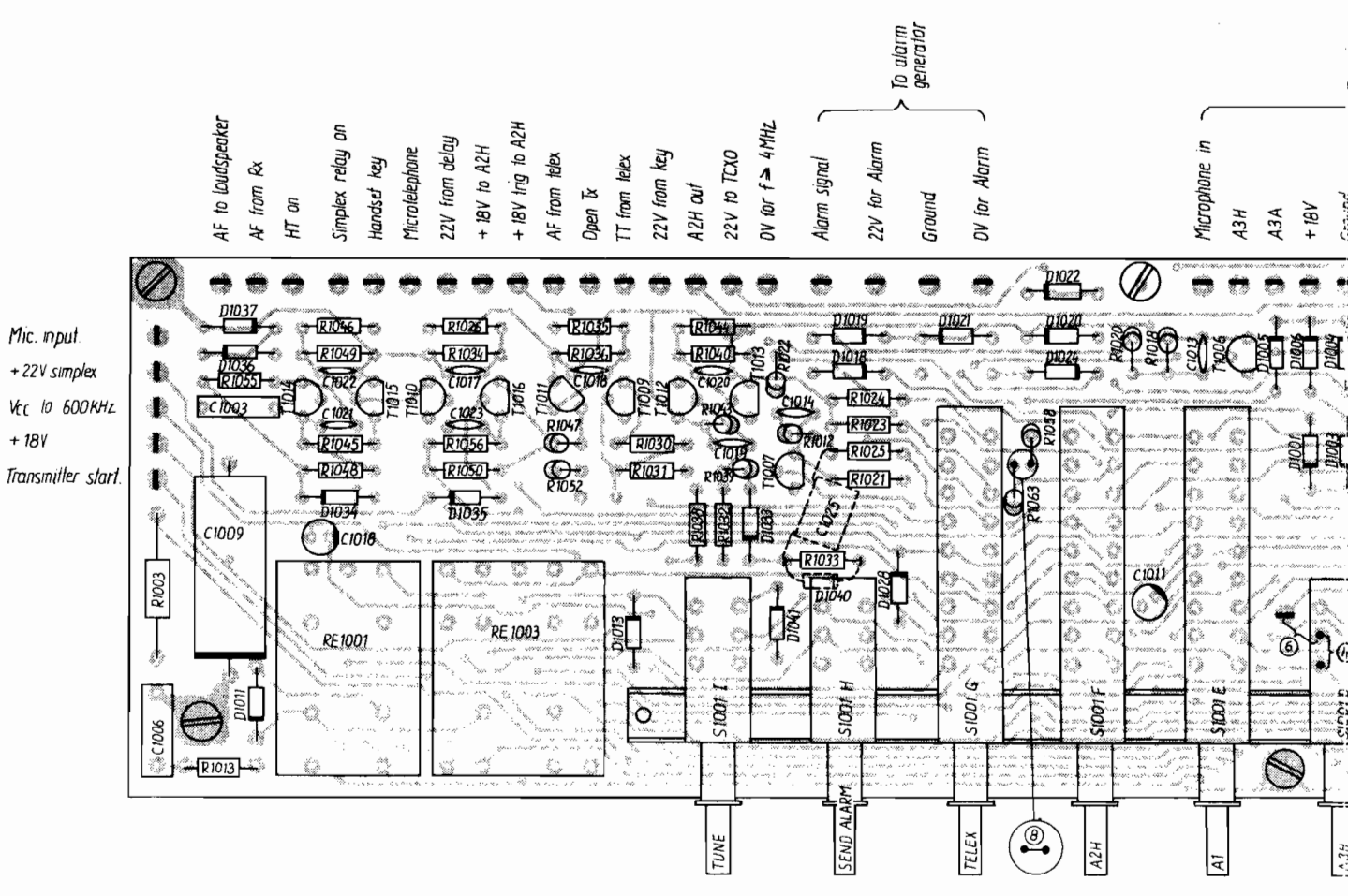

COMPONENT LOCATION MODE SWITCH (MODULE 1000)

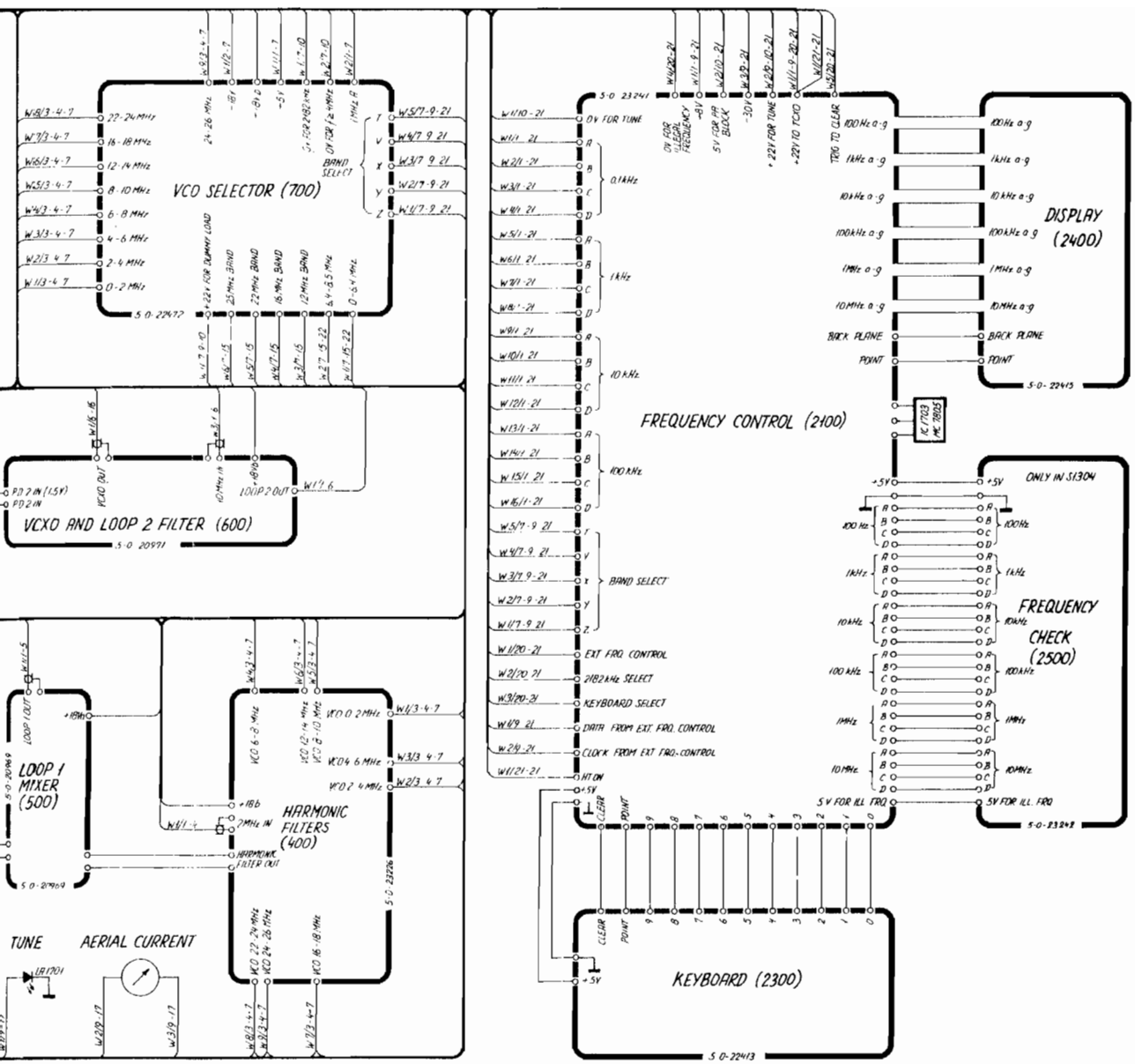

		25	CLOCK FROM EXT FRQ CONTROL
		26	AERIAL METER 1
		27	AERIAL METER 2
		28	AF TO MICROTELEPHONE
		29	OPEN TX
	FOR TUNE	30	22V FOR DUMMY LOAD
	TUNE LAMP	31	GROUND FOR MIC AND TELEX
	NSMITTER START	32	+ 22V SIMPLEX
	BLOCK	33	AF TO LOUDSPEAKER
	E LEVEL 1	34	HANDSET KEY
	E LEVEL 2	35	
	ON	36	+22V TO TCXO

MAIN SCHEMATIC DIAGRAM FOR Ⓔ SAILOR EXCITER S1303/S1304

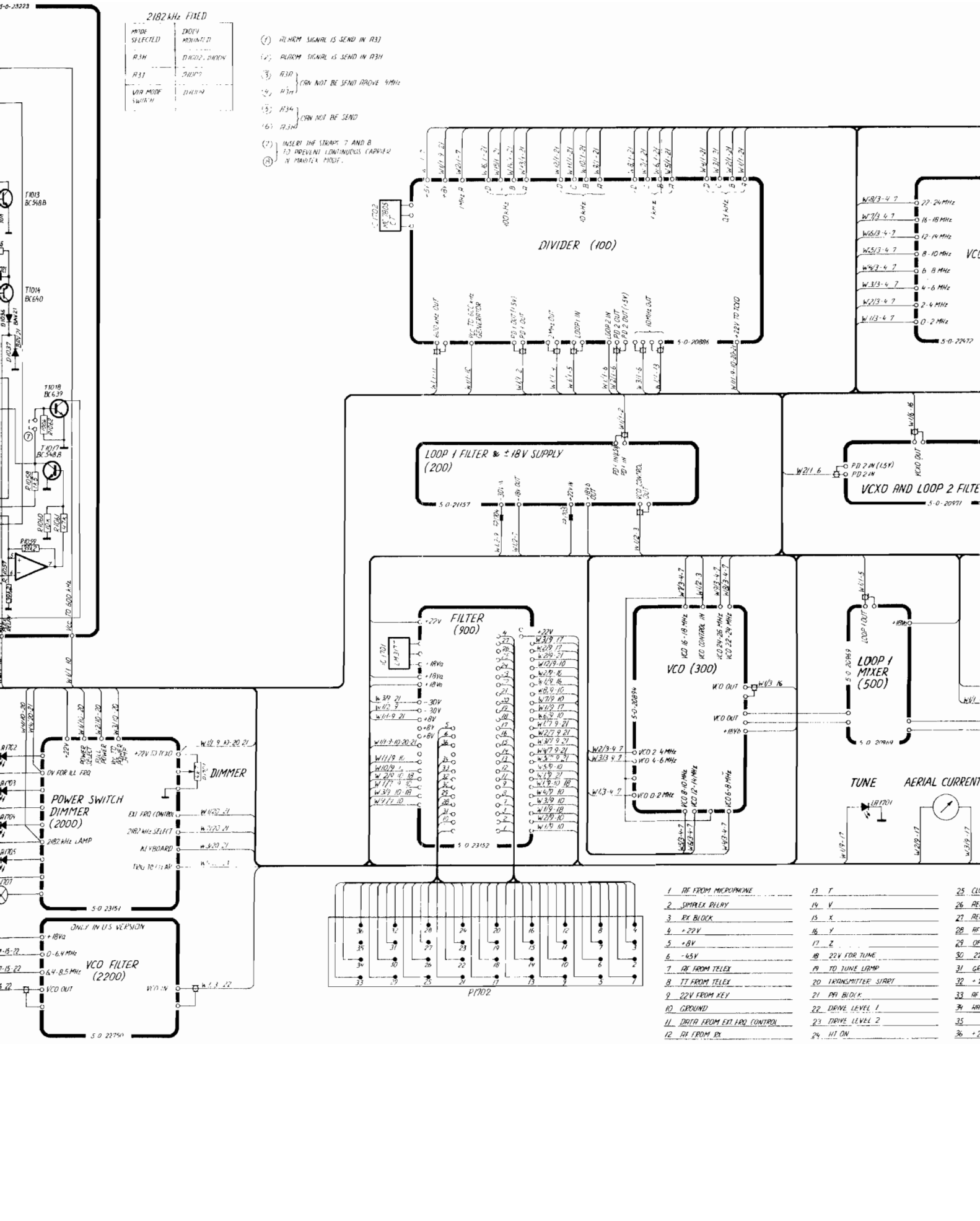
2182 kHz FIXED
MODE SELECTED
DRIVE MONITOR
A3H
A3J
VIA MODE SWITCH
(1) ALARM SIGNAL IS SEND IN A3J
(2) ALARM IS SEND IN A3H
(3) A3A
(4) A3H
CAN NOT BE SEND ABOVE 4MHz
(5) A3A
(6) A3H
CAN NOT BE SEND
(7) INSERT THE STRAPS 7 AND 8
(8) TO PREVENT CONTINUOUS CARRIER IN MARITIM MODE.
DIVIDER (100)
5-0-20886
VCXO AND LOOP 2 FILTE
5-0-20971
LOOP 1 FILTER & ±18V SUPPLY (200)
5-0-21157
FILTER (900)
5-0 23152
VCO (300)
5-0-20894
LOOP 1 MIXER (500)
5-0 20869
POWER SWITCH DIMMER (2000)
5-0 23151
DIMMER
ONLY IN U.S. VERSION
VCO FILTER (2200)
5-0 22750
TUNE
AERIAL CURRENT
P1702
1 RF FROM MICROPHONE
2 SIMPLEX RELAY
3 RX BLOCK
4 +22V
5 +8V
6 -45V
7 RF FROM TELEX
8 TT FROM TELEX
9 22V FROM KEY
10 GROUND
11 DATA FROM EXT. FRQ CONTROL
12 RF FROM RX
13 T
14 V
15 X
16 Y
17 Z
18 22V FOR TUNE
19 TO TUNE LAMP
20 TRANSMITTER START
21 PA BLOCK
22 DRIVE LEVEL 1
23 DRIVE LEVEL 2
24 HI ON

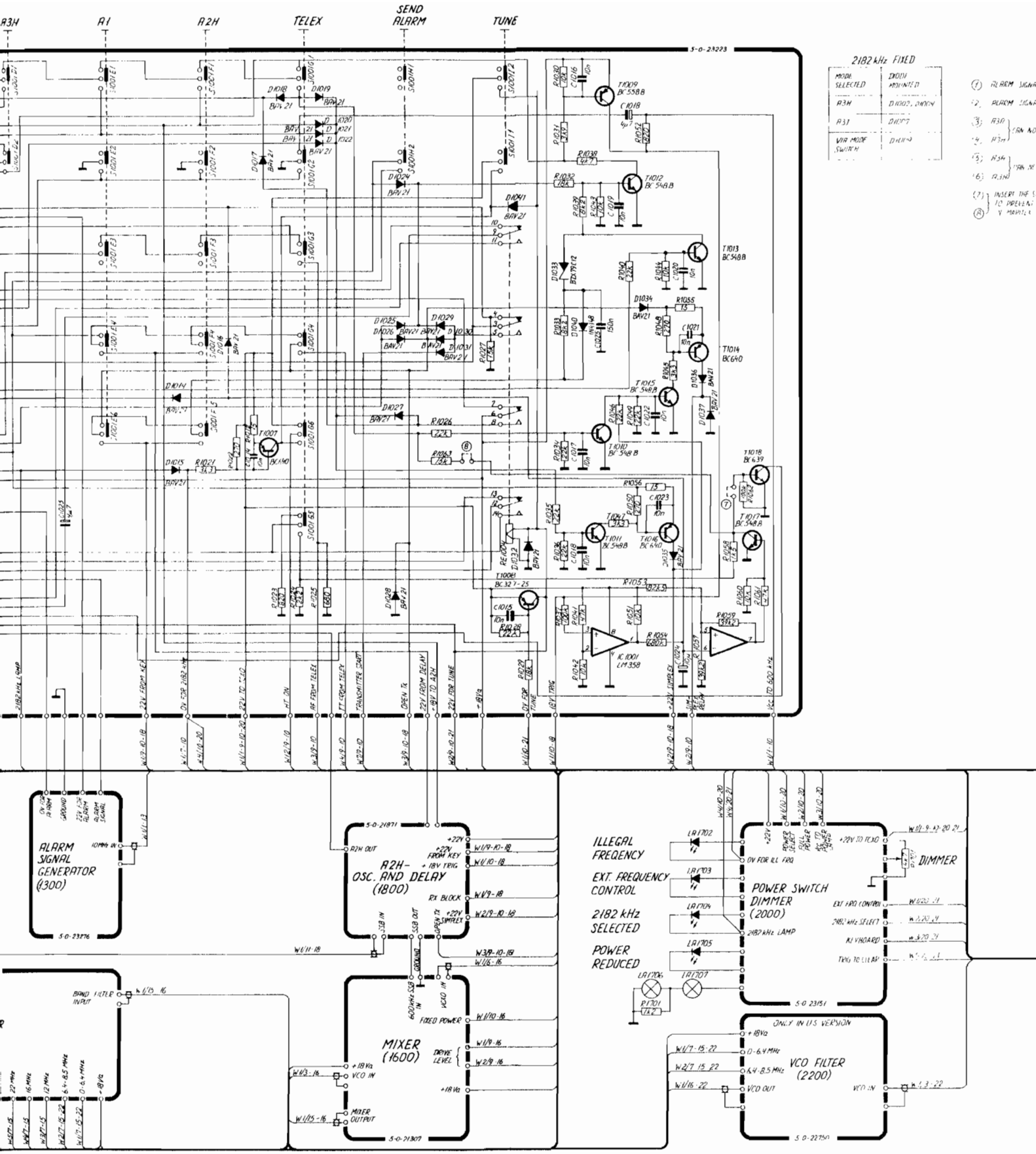
A3H
A1
A2H
TELEX
SEND ALARM
TUNE
5-0-23223
2182 kHz FIXED
MODE SELECTED
DIODE MOUNTED
A3H
A3I
VIA MODE SWITCH
ALARM SIGNAL GENERATOR (1300)
5-0-23276
A2H-OSC. AND DELAY (1800)
5-0-21871
MIXER (1600)
5-0-21307
ILLEGAL FREQENCY
EXT. FREQUENCY CONTROL
2182 kHz SELECTED
POWER REDUCED
POWER SWITCH DIMMER (2000)
5-0-23151
DIMMER
VCO FILTER (2200)
5-0-22750
ONLY IN U.S. VERSION
BAND FILTER INPUT
FIXED POWER
DRIVE LEVEL
MIXER OUTPUT
VCO IN
VCO OUT
IC1001 LM358

S1303/04
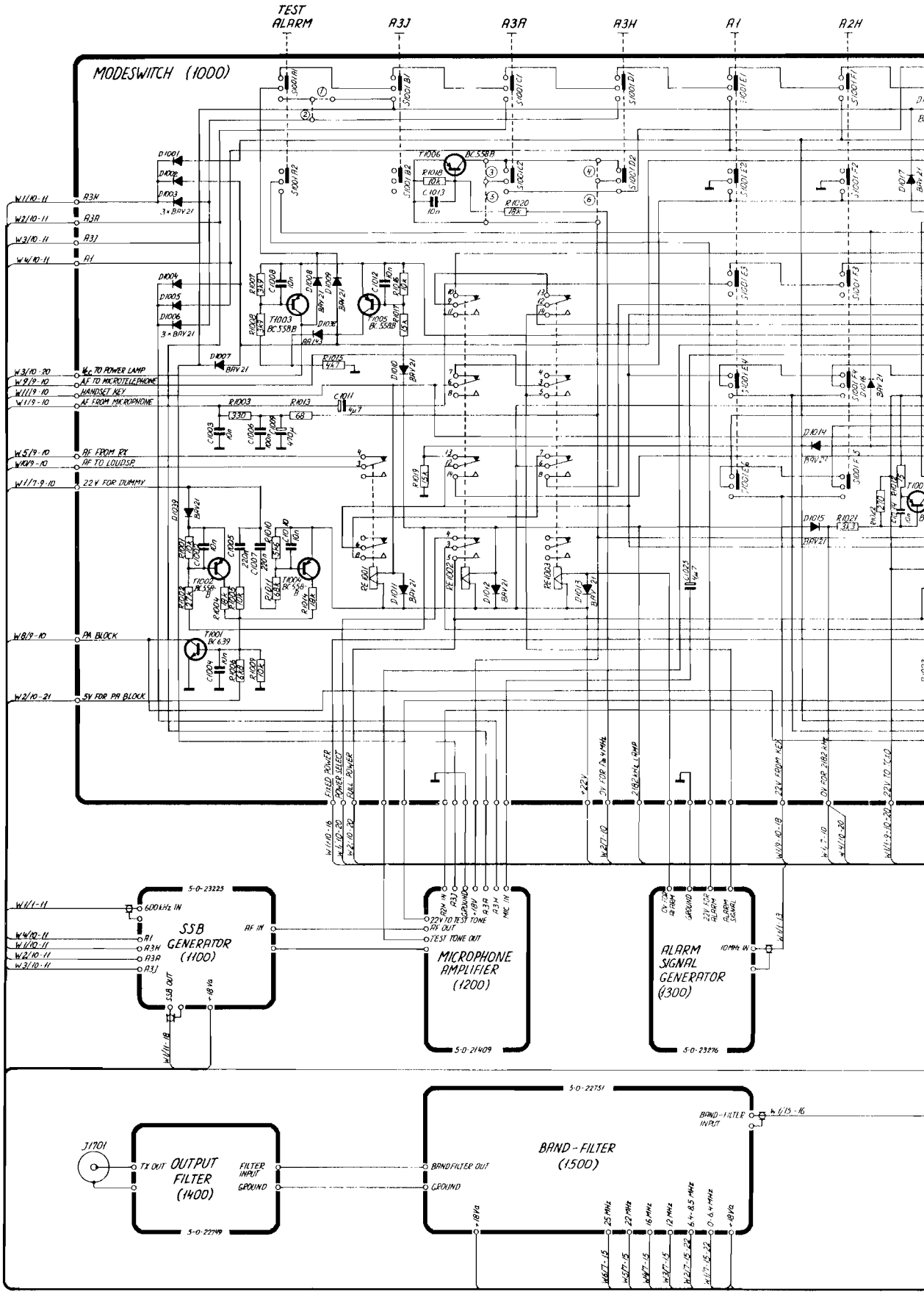
4-0-23245 E