Valved Communications Receivers

The BC-348 (Part 1)

Beginning this month, Chas E. Miller looks at the famous BC-348 series of airborne receivers, used by the US Air Force during World War 2 and for a number of years afterwards. In this issue he describes the circuit arrangements used, and in Part 2 he deals with modifications and realignment procedures.

The BC-348 series ran to several mark letters during its long production history, and although the outside appearances were similar, internally there were considerable divergences, particularly with the later models. The basic common specification was of a superhet having two r.f. stages, frequency-changer, three i.f. stages, detector/a.g.c., and output stage. There was no intermediate a.f. amplifier between detector and output. The frequency-changer stage in the earlier marks consisted of separate mixer and local oscillator valves, later altered to a single-valve configuration. The early marks had a b.f.o. combined with the 2nd i.f. amplifier, whilst the later types had it combined with the detector/a.g.c. valve. The frequency coverage was the same for all marks: 200–500kHz, 1.5–3.5MHz, 3.5–6MHz, 6–9.5MHz, 9.5–13.5MHz and 13.5–18MHz.

The power source being the aircraft 24V service battery, the valve heaters were arranged in series-parallel to present a nominal 25.2V load. The h.t. was supplied by a dynamotor rated at 28V input and approximately 235V output at 75mA. Why 28V, you may ask.

Well, a lead-acid accumulator of nominally 24V (12 two-volt cells) gives 26.4V when fully charged (2.2V per cell). However, when on charge the terminal voltage will be of the order of 28V, hence the input rating of the dynamotor. Resistors were also placed in the heater circuit to reduce the voltage suitably, as the battery was expected to be on charge throughout operational flights. Similarly, a nominal 12V battery gives 13.2V fully charged and has a terminal voltage of around 14V on charge.

Another series of receivers numbered BC-224 was in concurrent production, these models being identical with the BC-348 except for the power source, viz., 12.6V battery. The following notes will, therefore, be generally applicable to the two types.

Circuit Description

Models prior to suffix -J (Fig. 1.1)

The antenna input is taken via a small trimmer to the control grid of the 1st r.f. amplifier (V1, VT86/6K7) which is an r.f. pentode operating with both manual and automatic gain control. Single tuning inductances for the grid circuit are selected by the band switch. Transformer coupling is used to transfer the signals to the 2nd r.f. amplifier (V2, VT86/6K7), another r.f. pentode having manual and automatic control, and which additionally has a balancing potentiometer in its cathode circuit (commoned with that of V1 for manual control) which is adjusted for minimum "noise". Similar coupling passes on the signals to the mixer valve (V3, VT91/6J7), a straight r.f. pentode with cathode-coupling to the local oscillator triode (V4, VT65/6C5). The intermediate frequency is 915kHz.

The first i.f. coupling transformer incorporates an optional narrow-bandwidth crystal filter for c.w. reception. The first i.f. amplifier (V5, VT86/6K7) is followed by a double valve having triode and vari-mu pentode sections (V6,VT70/6F7). The latter is employed as the 2nd i.f. amplifier. Both these stages share the manual and autogain control applied to the r.f. amplifiers. The 3rd i.f. amplifier (V7, VT93/6B8) is the pentode section of a double-diode-pentode valve. This is operated with neither type of gain control, a fixed bias of 21V being applied to its cathode. Most of this voltage is used to delay the a.g.c. action, the diode concerned having a common cathode, and thus part of the voltage is fed back to the control grid of the pentode so that it receives an effective bias of no more than 2V. The a.g.c. diode, being returned to chassis by its load resistor, receives the full 21V bias whilst the detector, being returned to cathode, receives zero bias.

Audio frequency signals appearing on the secondary of the fourth i.f. transformer are taken directly to the manual volume control without any elaborate i.f. filtering network. When automatic gain is in use the manual control operates normally, passing signals at the desired level to the grid of the output valve (V8, VT48/41, or VT152/6K6GT). When manual gain control is selected, the a.f. control is bypassed to maximum and the output of the receiver controlled entirely by the cathode voltage applied to V1, V2, V5 and V6. The a.f. and r.f. gain controls are mounted in tandem and operated by one and the same knob. (Cf. R1155). The earlier VT48/41 output valve is, in fact, electrically identical to the VT152/6K6GT which superseded it, the difference lying in the shape of the envelope and the type of base. The 41 is a UX-base valve with conventional curved envelope whereas the 6K6GT has an octal base and a small tubular envelope.

The optional b.f.o. employs the triode section of V6 in a conventional tuned-anode, tuned-grid circuit with permeability tuning of the inductances. The output is coupled to the anode of the pentode section of V6 by a small capacitor consisting of a few turns of wire around the lead to the i.f. transformer primary.

Circuit Description

Models with suffix -J and later (Fig. 1.2)

The antenna input passes to one of the r.f. transformers selected by the band-switch and having tuned secondaries, but with a measure of direct coupling (via a 7pF capacitor) to the control grid of the first r.f. amplifier (V1, VT117/6SK7). This is the single-ended version of the 6K7, and is electrically similar. It has, however, an improved mutual conductance and different inter-electrode capacities. Resistance-capacitance coupling is employed to the coils in the grid circuit of the 2nd r.f. amplifier (V2, VT117/6SK7). Those for the 1.5–18MHz band are r.f. transformers, whilst the 200kHz–500kHz band has a single winding. A very similar system is used to couple the signals from V2 to the frequency-changer stage. Both r.f. amplifiers have manual and automatic gain control but the balancing potentiometer in the cathode circuitry is omitted.

The resistance-capacitance intervalve coupling appears to have been a somewhat retrograde step on a pentagrid frequency-changer valve in place of the former mixer/local oscillator arrangement. The type chosen for the job (V3, VT150/6SA7) has a good performance up to 6MHz, above which even the makers admitted that oscillator action was a little tricky to obtain and maintain consistently throughout tuning bands; therefore a separate local oscillator was recommended. Nevertheless, in the BC-348 the 6SA7 was used on its own, with the typical cathode-coupled oscillator circuit. The intermediate frequency is

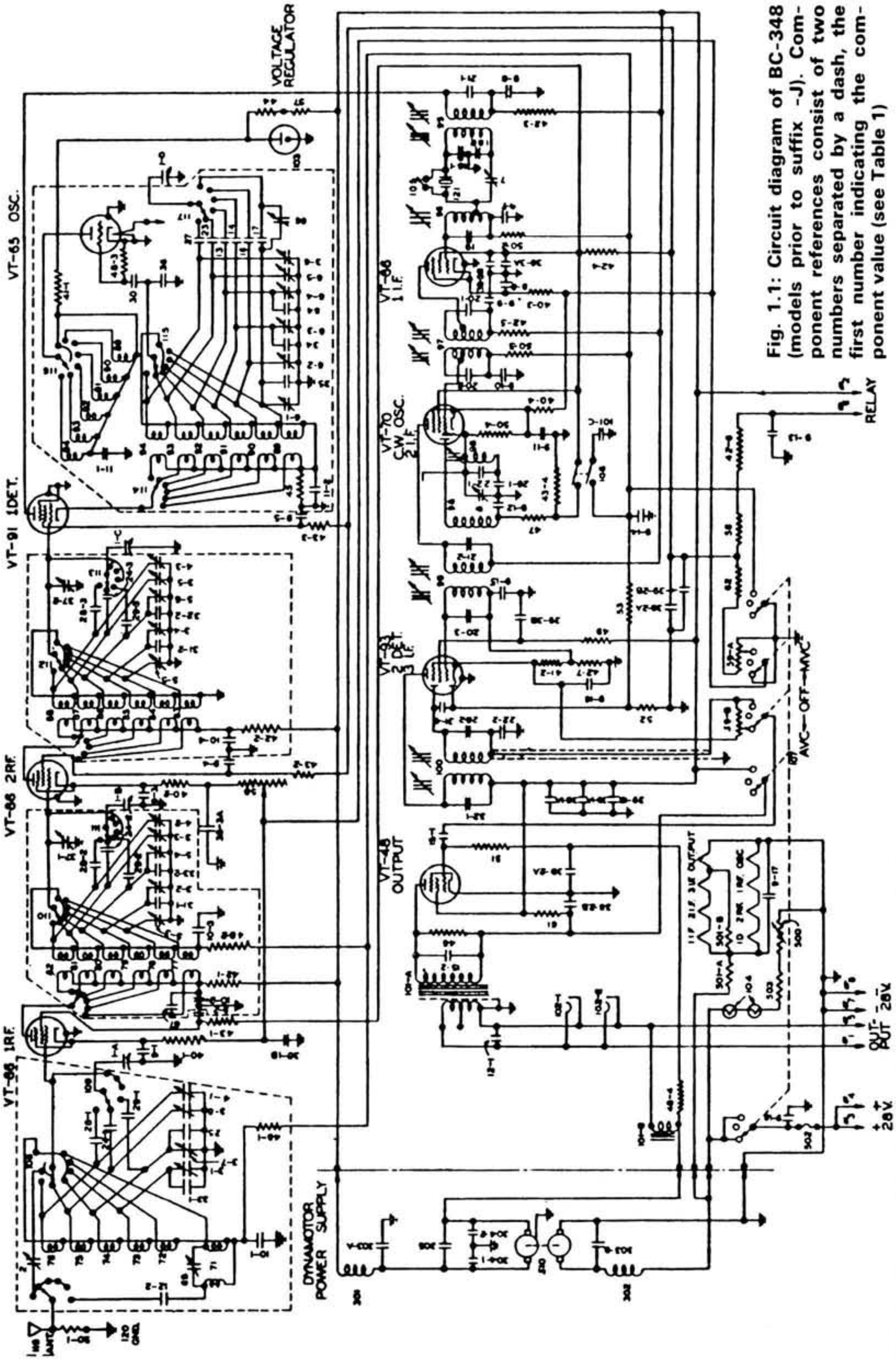

Fig. 1.1: Circuit diagram of BC-348 (models prior to suffix -J). Component references consist of two numbers separated by a dash, the first number indicating the component value (see Table 1)

TABLE 1

Components Ref	Value
1	13.5–331.6pF
2	50pF max.
3	50pF max.
4	50pF max.
5	25pF max.
6	25pF max.
7	10pF max.
8	10pF max.
9	10nF
10	10nF
11	10nF
12	5nF
13	390pF
14	2.24nF
15	1.5nF
16	670pF
17	130pF
18	500pF
19	235pF
20	260pF
21	250pF
22	240pF
23	170pF
24	155pF
25	25pF
26	150pF
27	135pF
28	135pF
29	470pF
30	100pF
31	75pF
32	47pF
33	50pF
34	85pF
35	47pF
36	30pF
37	25pF max.
38	0.5µF
39	0.5µF
40	470Ω
41	1kΩ
42	4.7kΩ
43	10kΩ
44	12kΩ
45	15kΩ
46	56kΩ
47	68kΩ
48	100kΩ
49	180kΩ
50	470kΩ
51	560kΩ
52	1.5MΩ
53	220kΩ
56	10kΩ
57	27kΩ
58	3.5kΩ var.
59-A	20kΩ var.
59-B	350kΩ var.
61	2.4kΩ
62	47kΩ
64	35pF
65	10pF max.
66	25pF
67	750pF
101-C	50nF
303	0.5µF
304	10nF
305	1µF
500	200Ω var.
501-A	3Ω
501-B	190Ω
503	60Ω

once again 915kHz.

Conventional i.f. transformer coupling is used from the anode of V3 to the grid of the 1st i.f. amplifier (V4, VT117/6SK7), operating with manual/auto gain and sharing a common cathode resistor with the 2nd i.f. amplifier (V5, VT117/6SK7). Between these two valves is another example of resistance-capacitance coupling with a rudimentary tuning arrangement in the grid circuit of V5. There is also an optional crystal filter included in this coupling device, shorted out when not required. A normal i.f.t. couples V5 to the 3rd i.f. amplifier (V6, VT115/6SJ7). This is a straight r.f. pentode operating in much the same way as the 6B8 in the earlier marks as regards bias arrangements, although the detector/a.g.c. diodes are now to be found in another valve (V7, VT233/6SR7). The latter is a double-diode-triode with the triode section used for the b.f.o. Its cathode is connected to that of V6 to provide delay bias for the a.g.c. The a.f. coupling to the output stage (V8, VT152/6K6GT) is as described for the earlier marks. The r.f. gain control, heater and h.t. provisions are also virtually identical.

NEXT MONTH

Chas E. Miller looks at some of the modifications appropriate to the BC-348, including the provision of mains power supplies, loudspeaker output, extra i.f. and a.f. sensitivity, separation of r.f. and a.f. gain controls, fitting an S-meter, and adding medium-wave coverage, plus notes on servicing and realignment.

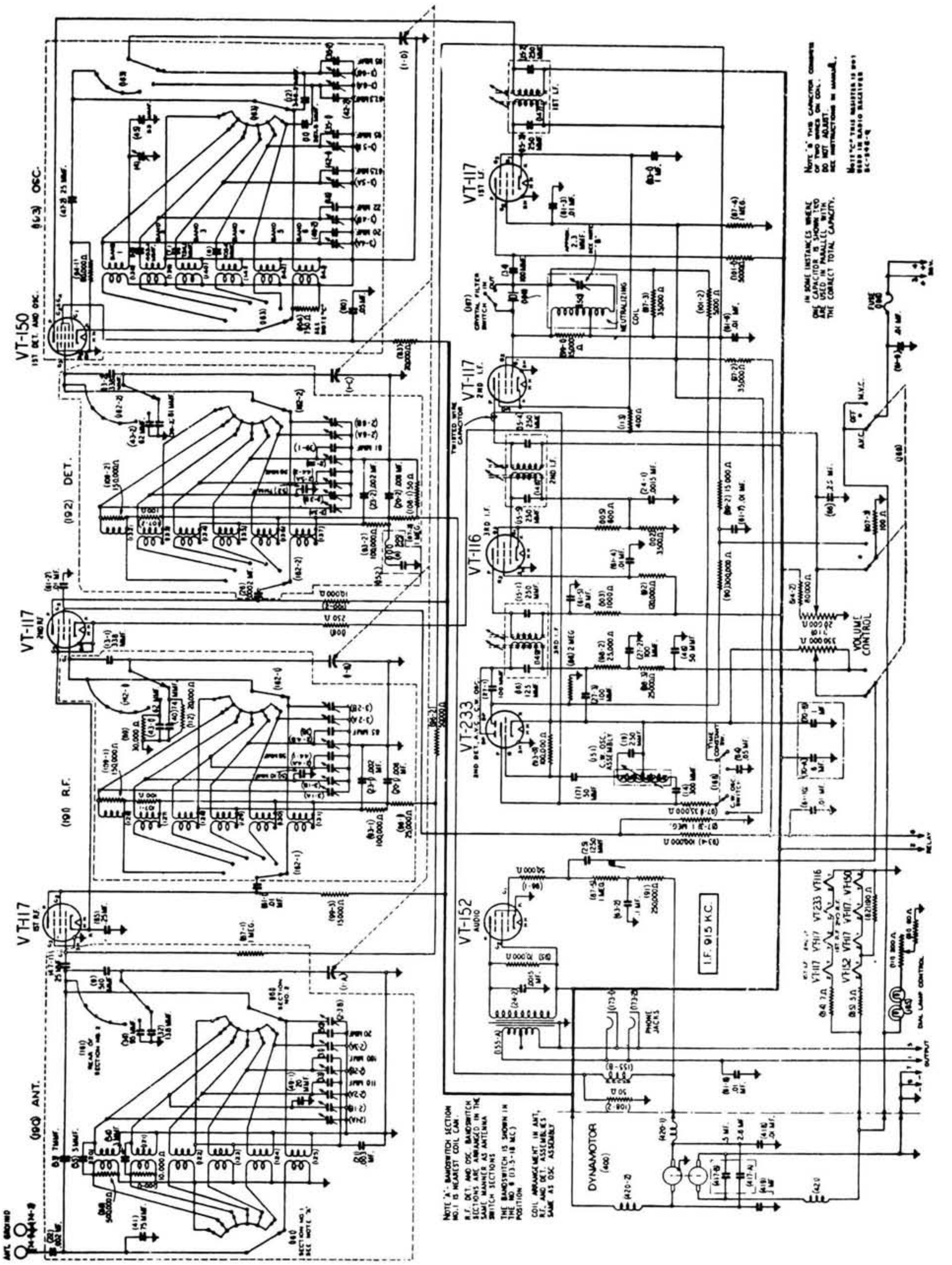

Fig. 1.2: Circuit diagram of the BC-348 (models with suffix -J and later)

Valved Communications Receivers

The BC-348 (Part 2)

This month, Chas E. Miller continues his in-depth description of the US Air Force BC-348 series of receivers, covering various modifications to augment their performance and versatility for civilian use, plus notes on servicing and realignment.

It is unlikely that many of these receivers still exist in unmodified form, but as is unfortunately the case with all too many such exercises, the quality of the workmanship and the performance obtained may leave something to be desired. The following notes will assist the owner of a BC-348 to realise the maximum performance. They are based entirely on practical experience with sets spanning a period of some three years.

Power Considerations

The provision of a mains-derived power supply has always been the prime object in the modification of the BC-348, as few domestic locations could tolerate the whine of the dynamotor, quite apart from the difficuluty of providing the necessary 24V d.c.! Some informed opinion leans toward having the mains power pack external to the receiver itself, probably in the same cabinet as the loudspeaker, to avoid heat within the set, and this is certainly a point worth consideration. However, if one is prepared to provide a ventilation louvre in the cabinet top, it is perfectly possible to fit a power pack in the space vacated by the redundant dynamotor.

The standard policy for the heaters of the valves was to rewire them for 6.3V parallel operation, in which case they will consume some 2.5A, to which must be added the current drawn by any dial lamps, etc. To be on the safe side the transformer rating must be at least 3A, and preferably somewhat more. An unmodified set could have its heaters supplied by a 24V–28V transformer rated at 0.75A or a little more. The h.t. line being around 225V, a transformer giving at least 250–0–250V is required to allow a drop through the smoothing arrangements. A point that must be noted is that negative bias is employed for the output valve, derived from resistors in the h.t. negative line. Therefore, the normal practice of earthing the h.t. negative supply rail cannot be followed, and the connection must be made to the terminal formerly used for the dynamotor. It may be more convenient to use standard earthed-can electrolytics rather than the type with an insulated negative, in which case they may be wired as normal (Fig. 2.1), but with the centre-tap of the h.t. winding disconnected from earth and taken to the h.t. negative terminal. A 50μF, 50V electrolytic wired across from h.t. negative to chassis will eliminate any hum that might occur.

Loudspeaker Matching

As with many military receivers, the BC-348 was designed for use with headphones, the output transformer catering for alternative load impedances of 500 or 4500Ω. It is possible to use another transformer to match one of these outputs to a standard loudspeaker, or to replace the original transformer by a conventional type. The 41 or 6K6GT requires a load of approximately 8000 ohms under its conditions of use in the BC-348; the transformer ratio must, of course, be chosen to suit the impedance of the loudspeaker to be used. If the original transformer is to be retained the additional transformer must be suitable for matching 4500Ω to the loudspeaker impedance The ratio of the windings is found from the well-known formula

$$\sqrt{\frac{Ra}{\text{LS Impedance}}}$$

For example, a 40Ω loudspeaker requires a transformer of 45:1 turns ratio to match it to the 6K6GT.

Extra A.F. Sensitivity

The above-mentioned use of headphones made it possible for the BC-348 to deliver ample output without the

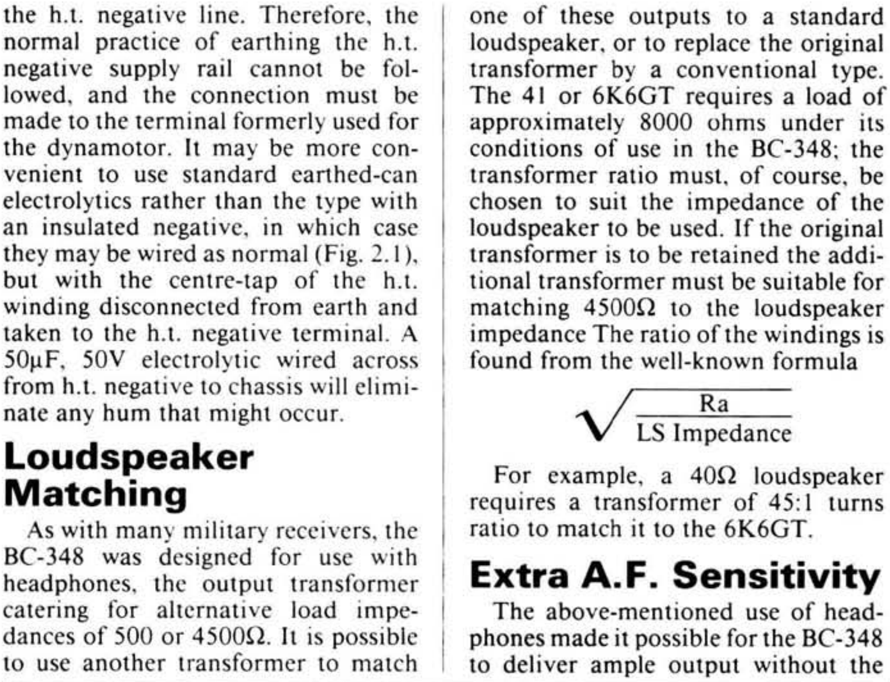

Fig. 2.1: To adapt a standard a.c. mains power pack for use with the BC-348, break its chassis connection at point "X" (only essential features shown)

need for an a.f. voltage amplifier prior to the output stage. It will be found, however, that a.f. sensitivity is just a little too low for really satisfactory loudspeaker work, and improvements in this respect are most desirable. The time-honoured method used was the construction of a small amplifier stage using, say, a 6J5 triode, and built on the ex-dynamotor mounting plate.

There are other options available which may be more attractive, especially if the room on the plate has already been taken up by the a.c. mains power pack. One possibility is to replace the 6K6GT with a high-slope output valve such as the 6AG6. This has a mutual conductance of 10mA/V as compared with the 2.3mA/V of the 6K6GT (or 41) and would greatly increase the a.f. sensitivity. Note though that the bulb size may cause problems in some marks of the receiver, and that the comparatively heavy heater current (1.5A) may require the services of a larger mains transformer.

The Mullard EL33 has a slope of 9mA/V for a heater current of 0.9A and is also worth consideration. Replacement of the 41 by either type just mentioned will, of course, necessitate a change of valve-holder.

If the power pack has been mounted externally to the receiver there will be no shortage of space for another valve stage in the set, but rather than having to carve holes in the dynamotor plate the owner could consider relocating the output valve to a position on the power pack, leaving its vacated holder to accommodate an amplifier triode, such as the 6J5.

In the later marks where a 6SR7 is used as detector/a.g.c./b.f.o. valve an interesting and highly effective modification is possible. This is to replace the final i.f. amplifier (6SR7) with a 6B8 double-diode-pentode as used in the earlier sets; it is fitted into the 6SR7 holder in order that the wiring to the detector and a.g.c. diodes shall remain undisturbed. The alterations to the holder for the pentode section of the 6B8 are minor and easily carried out.

Since the new valve has a top cap for its control grid, the i.f. transformer must be slightly modified to provide a lead from the top of its can instead of the bottom. The construction of the transformer makes this a very simple process which may be achieved with only the removal of the two can-securing nuts; the stout wires to which the windings are soldered travel the full length of the can and the grid connection is available immediately. All that is required is a small extension to the existing trimmer access holes to accommodate the top cap lead. The valve base vacated by the 6SJ7 may now be used to accommodate a 6SN7 double-triode; one section takes up the duty of b.f.o., the other becomes the extra a.f. amplifier. The writer can vouch for the excellent performance obtainable from this modification. (See Fig. 2.2).

Increased I.F. Sensitivity

The gain of the i.f. stages of the -J and later marks may be increased dramatically by replacing the existing coupling/neutralising coil by a tightly-tuned alternative, and dispensing with the crystal filter, if, indeed it has not already been removed by a previous modifier! The coil will be found mounted on a small paxolin panel just above the b.f.o. coil assembly, and may be removed from the front panel. The coil should be put to one side for possible future use, as it makes an excellent b.f.o. coil itself should the existing one fail. The replacement should be wound on a former of similar diameter, into which a portion of an old ferrite antenna rod may be slipped to increase the inductance. About 125 turns of 36 s.w.g. wire will be found to be suitable; it should be shunted by a fixed trimmer of about 270pF, and a variable of 0–100pF. It must be stressed that these values depend a lot on the exact way in which the coil has been wound (pile winding is simple and effective) and may have to be varied to suit the individual. No difficulty should be experienced, however, in producing a coil which will tune to the 915kHz i.f. with a sharpness that will bring a very considerable increase in the gain of the stage.

Separate Gain Controls

The original method of having the r.f. and a.f. gain controls mounted on the same shaft and operating them alternatively is not altogether satisfactory for normal s.w.l. use. When the mode switch is set to "AVC" the r.f. gain control is by-passed to earth via a 100Ω resistor, and is rendered ineffective. Likewise, selecting "Manual" shorts out the a.f. gain control to give maximum gain, the output of the receiver being controlled only by the r.f. gain control. A better system may be achieved by installing a separate r.f. gain potentiometer (10kΩ) on the front panel, and transferring to it the leads from the original, so that it may be operated independently of the a.f. gain. At the same time the fixed 100Ω resistor should be removed and discarded, whilst the lead from the top end of the a.f. gain potentiometer to the mode switch should also be disconnected. Both gain controls will then work normally whichever mode is selected.

Fitting an S-Meter

The method described in previous articles in this series, and in "Versatile Valve Monitor and S-Meter" (*PW*, May 1986) may again be successfully employed. Alternatively, a system that was much in vogue with BC-348 owners many years ago may be revived. This depends on the change of screen grid current in the 2nd i.f. amplifier when the a.g.c. comes into operation. (See Fig. 2.3). It is fairly easy to disconnect the relevant electrode from the common G2 supply line and to take it to point B on the diagram. It will be seen that a simple bridge circuit is formed, one arm being the current path through the valve. The meter should have an f.s.d. of around 500μA–1mA, the exact value not being critical, as the value of R2 may be altered to provide the desired degree of sensitivity to suit the instrument. The zero-set potentiometer VR1 may be replaced (if a 1kΩ type is not available) with a 5kΩ type shunted by a 1.8kΩ resistor. Do not omit the decoupling capacitor for the valve G2, which should be connected directly between the relevant pin and the nearby earth point.

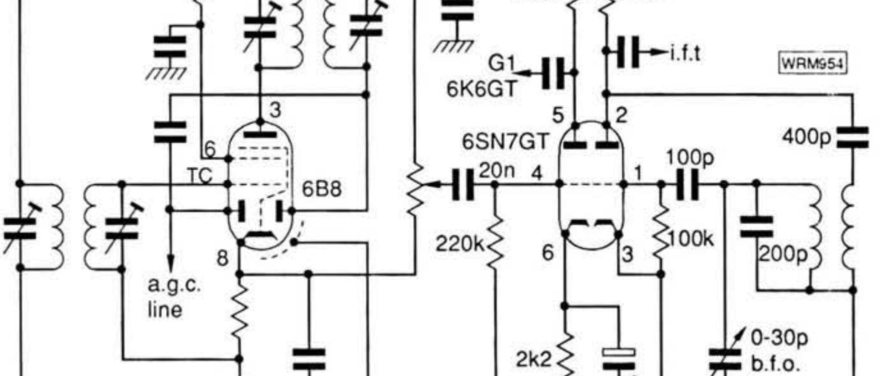

Fig. 2.2: Modifications to the last i.f./b.f.o. stages (-J and later marks) to include an extra a.f. amplifier, plus a continuously variable-tuned b.f.o. for s.s.b. reception. New components have values shown; existing components do not. The b.f.o. coil is the redundant i.f./xtal coupler removed from set (see text)

Adding Medium-wave Coverage

This is a much more ambitious project and should not be attempted unless the owner/modifier has ample experience in the construction and adjustment of tuned circuits. For this reason, the following notes will be of a general nature as it is felt that the degree of skill required will make highly detailed data superfluous.

The conversions of the near-useless 200kHz–500kHz band to m.w. coverage would be much simpler were it not for the 915kHz i.f. which, of course, is bang in the middle of the m.w. broadcast band! Even with a fairly narrow i.f. bandwidth it is all too plain that strong stations from about 890–940kHz (337–319m) are likely to prove to be an acute embarrassment unless the most stringent precautions are employed to exclude them from the i.f. section of the receiver. Unfortunately the main contender will be the BBC Radio 2 network on 909kHz, with transmitters of up to 140kW power.

To ensure sharp tuning, all r.f. tuning coils should be double-wound and fitted with iron-dust cores for accurate alignment at the l.f. end of the band. The existing trimmers, for the high end, should prove to be adaptable for the new coils. A very necessary adjunct is a series antenna filter or rejector. This may be made up in a similar manner to the i.f. tuning coil described above, and is adjusted for minimum response with an input at i.f. from a signal generator, and perhaps subsequently with an antenna input from a very strong transmitter which is posing interference problems. In practice, excellent coverage throughout the greater part of the m.w. band may be achieved, making this admittedly lengthy conversion job very rewarding in the long term.

General Servicing Note

These receivers were made to very high mechanical and electrical standards and are likely to give little trouble in either respect. It is the writer's experience that the most probable source of faults will be previous unsatisfactory modification work. For this reason it is desirable that all existing "mods" should be closely examined when a receiver is first acquired. The connection of the h.t. negative lead mentioned earlier is one item that may easily be overlooked by a modifier unused to the negative-bias arrangement. Another common fault is the use of too thin a gauge of wire for the valve heater supply, particularly when an external power pack is used. There can be a significant voltage drop along thin cables which may reduce the actual heater voltage to well below 6V, and thus impair the efficiency of the valves. Similarly, when the original power supply socket of the receiver is used for the new p.s.u., even a very small degree of poor contact between plug and socket can affect the l.t. voltage markedly.

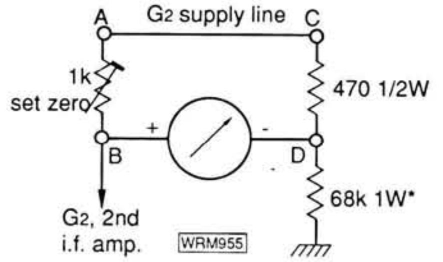

*Adjust value to suit meter sensitivity

Fig. 2.3: "Traditional" BC-348 S-meter circuit. Voltage across C–D for values shown is 0.7V approx. The SET ZERO preset is adjusted for the same voltage across A–B

The bane of so many old receivers—leaky h.t. decoupling capacitors—does not appear to affect the BC-348 to any great degree, making it one of the most reliable of sets in this respect. Consequently the risk of burned-out or changed-value decoupling resistors is also small. The only major component which is likely to be a little troublesome is the band-switch. It has been found that in some cases good contacts cannot be established with certainty when the knob is rotated clockwise, but much better results may be obtained when a counter-clockwise movement is used. This is worth bearing in mind if the sensitivity on one or more bands seems far below par.

Alignment

The BC-348 must be one of the very easiest receivers to line up. There are no complicated damping operations to be carried out on the i.f. transformers, only the last needing a certain amount of extra care. The r.f. alignment is particularly straightforward.

I.F. Alignment: Connect the signal generator output to the grid of the mixer/frequency-changer valve. This is more easily done by clipping the live lead to the appropriate section of the tuning gang. Connect an output meter across the loudspeaker terminals and adjust the first three i.f.t.s for maximum at 915kHz. The fourth transformer requires slightly different treatment. For this operation the signal generator is connected to the grid of the last i.f. amplifier via a 0.1μF capacitor, and is set initially to 910kHz. The primary winding and then the secondary winding are tuned for maximum with the cores turned in a clockwise direction, i.e., towards the centre of the coils. The generator should then be tuned through 915kHz to 920kHz, where another peak of the same amplitude as at 910kHz should be obtained. This will indicate that the correct "double-hump" response has been achieved. Some slight re-adjustment of the cores may be required to obtain equality between the two "humps". If a wobbulator and oscilloscope are available the job will, of course, be greatly facilitated.

R.F. Alignment: The exceptionally easy adjustment mentioned previously is due to there being but one trimming frequency for all bands other than the lowest. All trimmers are available through holes in the r.f. coil cans, and are clearly marked to correspond with the Band numbers. For example, the trimmers marked 1 on the antenna, r.f., and oscillator cans all apply to Band 1. There is one extra trimmer for Band 1 which is mounted away from the others and is unmistakable. Commence with this trimmer with the receiver and generator tuned to 200kHz. Adjust for maximum, then proceed to the other Band 1 trimmers at 500kHz. Repeat these operations until no further improvement is possible. The high bands are all adjusted at their maximum frequency, e.g., Band 2 is adjusted at 3.5MHz, Band 3 at 6MHz, and so on. Since the padders are of fixed value there is no adjustment possible at the lower ends of these bands, and only if there should happen to be severe discrepancies in the dial readings will it be advisable or necessary to investigate further.

B.F.O. Problems

Normally the permeability-tuned b.f.o. assembly gives no trouble, but cases are known of a sudden and complete failure to oscillate which is almost impossible to "pin down". Where time is of the essence it may well be easier to scrap the existing coil and either wind another or use the redundant crystal coupling coil mentioned earlier. When this is done (see Fig. 2.2) a small variable capacitor will take the place of the coil assembly on the front panel; in practice this will be found to be rather more convenient than the former b.f.o. control. The control knob can be marked to indicate upper or lower side-band for s.s.b. reception. When the r.f. gain control modification has been carried out as well, it will be found that the BC-348 can acquit itself very well indeed on s.s.b. as well as for general listening purposes. **PW**