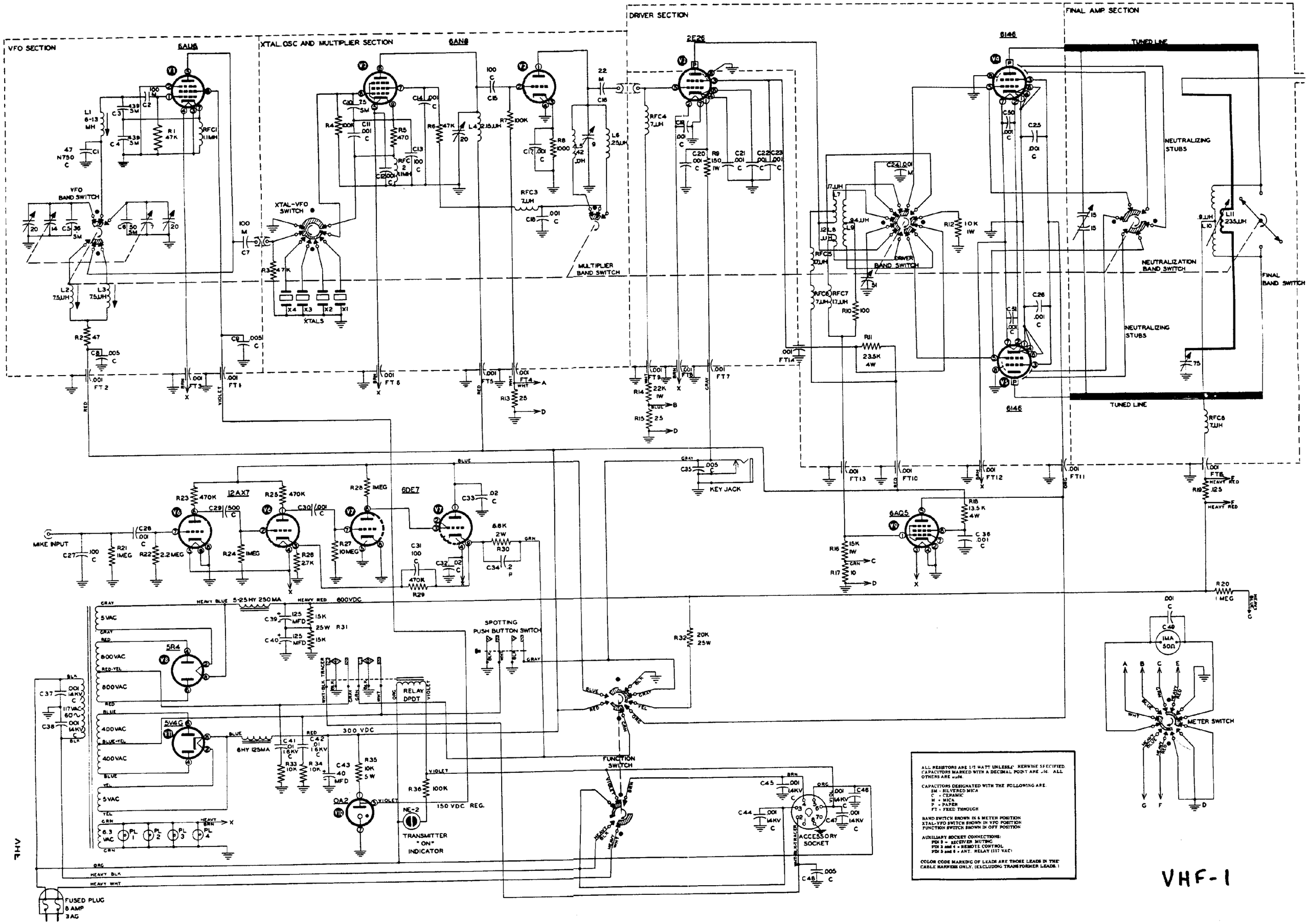
VFO SECTION
6AU6
XTAL. OSC AND MULTIPLIER SECTION
6AN8
DRIVER SECTION
2E26
FINAL AMP SECTION
6146
TUNED LINE
NEUTRALIZING STUBS
NEUTRALIZATION BAND SWITCH
FINAL BAND SWITCH
VFO BAND SWITCH
XTAL-VFO SWITCH
XTALS
MULTIPLIER BAND SWITCH
DRIVER BAND SWITCH
12AX7
6DE7
6AQ5
MIKE INPUT
KEY JACK
5R4
5V4G
RELAY DPDT
SPOTTING PUSH BUTTON SWITCH
FUNCTION SWITCH
TRANSMITTER "ON" INDICATOR
ACCESSORY SOCKET
METER SWITCH
FUSED PLUG 8 AMP 3AG
5-25 HY 250 MA
800VDC
6HY 125MA
300 VDC
150 VDC REG.
ALL RESISTORS ARE 1/2 WATT UNLESS OTHERWISE SPECIFIED.
CAPACITORS MARKED WITH A DECIMAL POINT ARE IN MFD. ALL OTHERS ARE IN MMFD.
CAPACITORS DESIGNATED WITH THE FOLLOWING ARE:
SM = SILVERED MICA
C = CERAMIC
M = MICA
P = PAPER
FT = FEED THROUGH
BAND SWITCH SHOWN IN 6 METER POSITION
XTAL-VFO SWITCH SHOWN IN VFO POSITION
FUNCTION SWITCH SHOWN IN OFF POSITION
AUXILIARY SOCKET CONNECTIONS:
PIN 2 = RECEIVER MUTING
PIN 3 and 4 = REMOTE CONTROL
PIN 5 and 6 = ANT. RELAY (117 VAC)
COLOR CODE MARKING OF LEADS ARE THOSE LEADS IN THE CABLE HARNESS ONLY. (EXCLUDING TRANSFORMER LEADS.)
VHF-1