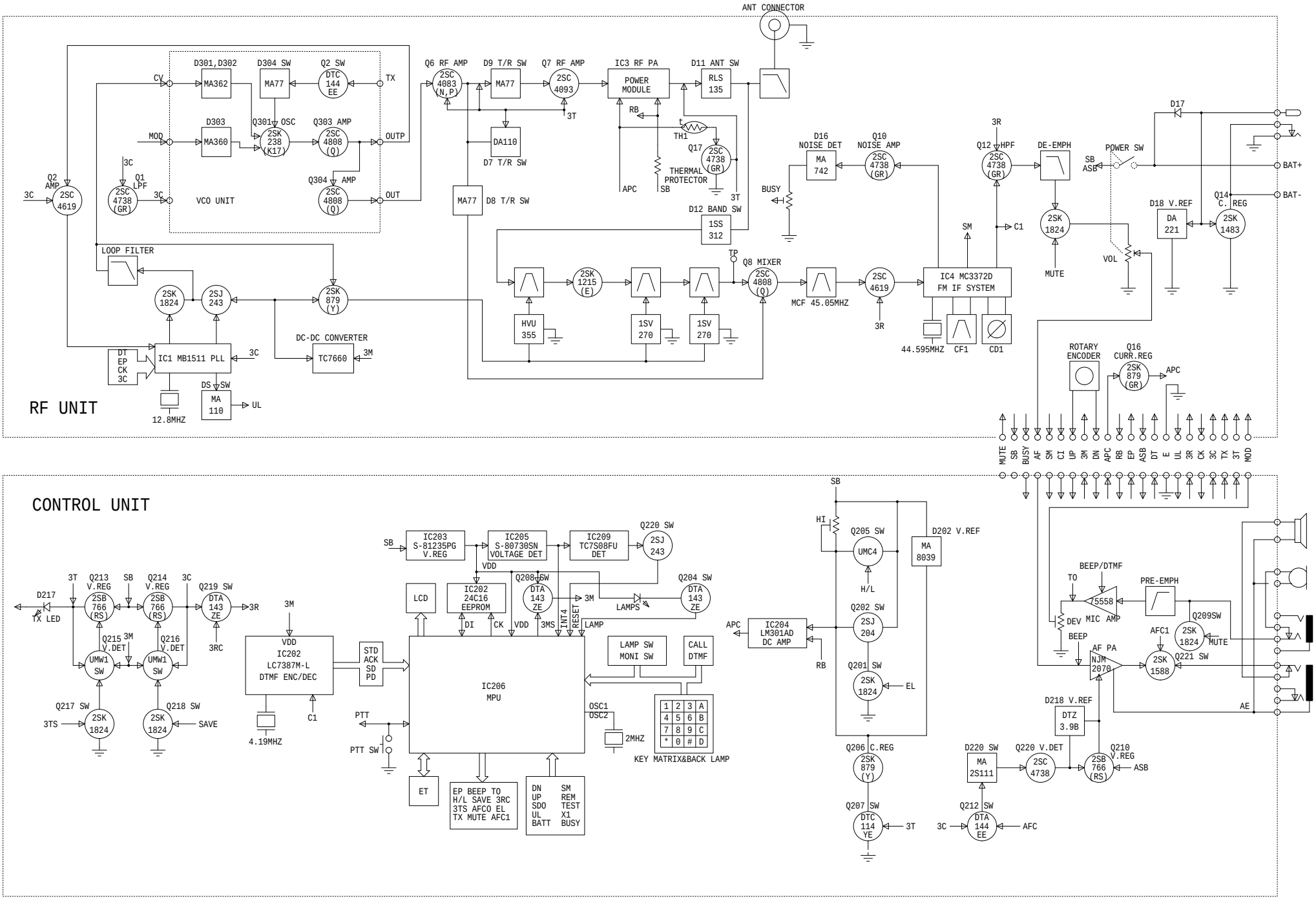
RF UNIT
CONTROL UNIT
ANT CONNECTOR
Q6 RF AMP
2SC 4083 (N,P)
D9 T/R SW
MA77
Q7 RF AMP
2SC 4093
IC3 RF PA
POWER MODULE
D11 ANT SW
RLS 135
D301,D302
MA362
D304 SW
MA77
Q2 SW
DTC 144 EE
TX
CV
MOD
D303
MA360
Q301 OSC
2SK 238 (K17)
Q303 AMP
2SC 4808 (Q)
OUTP
Q304 AMP
2SC 4808 (Q)
OUT
VCO UNIT
Q2 AMP
2SC 4619
Q1 LPF
2SC 4738 (GR)
3C
DA110
D7 T/R SW
MA77 D8 T/R SW
D12 BAND SW
1SS 312
RB
TH1
Q17
2SC 4738 (GR)
THERMAL PROTECTOR
APC
SB
3T
D16 NOISE DET
MA 742
Q10 NOISE AMP
2SC 4738 (GR)
BUSY
3R
Q12 HPF
2SC 4738 (GR)
DE-EMPH
2SK 1824
MUTE
SM
C1
POWER SW
SB
ASB
D17
BAT+
BAT-
Q14 C. REG
2SK 1483
D18 V.REF
DA 221
VOL
LOOP FILTER
2SK 1824
2SJ 243
2SK 879 (Y)
IC1 MB1511 PLL
DT
EP
CK
3C
12.8MHZ
DS SW
MA 110
UL
DC-DC CONVERTER
TC7660
3M
HVU 355
2SK 1215 (E)
1SV 270
1SV 270
TP
Q8 MIXER
2SC 4808 (Q)
MCF 45.05MHZ
2SC 4619
IC4 MC3372D FM IF SYSTEM
44.595MHZ
CF1
CD1
ROTARY ENCODER
Q16 CURR.REG
2SK 879 (GR)
APC
MUTE SB BUSY AF SM CI UP 3M DN APC RB EP ASB DT E UL 3R CK 3C TX 3T MOD
D217
TX LED
Q213 V.REG
2SB 766 (RS)
Q214 V.REG
2SB 766 (RS)
Q219 SW
DTA 143 ZE
3R
3RC
Q215 V.DET
Q216 V.DET
UMW1 SW
Q217 SW
2SK 1824
3TS
Q218 SW
2SK 1824
SAVE
VDD
IC202 LC7387M-L DTMF ENC/DEC
4.19MHZ
C1
STD ACK SD PD
IC203 S-81235PG V.REG
IC205 S-80730SN VOLTAGE DET
IC209 TC7S08FU DET
Q220 SW
2SJ 243
LCD
IC202 24C16 EEPROM
Q208 SW
DTA 143 ZE
Q204 SW
DTA 143 ZE
LAMPS
DI CK VDD 3MS INT4 RESET LAMP
IC206 MPU
LAMP SW MONI SW
CALL DTMF
OSC1 OSC2
2MHZ
PTT
PTT SW
ET
EP BEEP TO H/L SAVE 3RC 3TS AFCO EL TX MUTE AFC1
DN UP SDO UL BATT
SM REM TEST X1 BUSY
KEY MATRIX&BACK LAMP
HI
Q205 SW
UMC4
H/L
D202 V.REF
MA 8039
Q202 SW
2SJ 204
Q201 SW
2SK 1824
EL
IC204 LM301AD DC AMP
RB
Q206 C.REG
2SK 879 (Y)
Q207 SW
DTC 114 YE
3T
BEEP/DTMF
TO
LM5558 MIC AMP
PRE-EMPH
DEV
BEEP
Q209SW
2SK 1824
MUTE
AFC1
AF PA NJM 2070
2SK 1588
Q221 SW
AE
D218 V.REF
DTZ 3.9B
D220 SW
MA 2S111
Q220 V.DET
2SC 4738
Q210 V.REG
2SB 766 (RS)
ASB
Q212 SW
DTA 144 EE
AFC

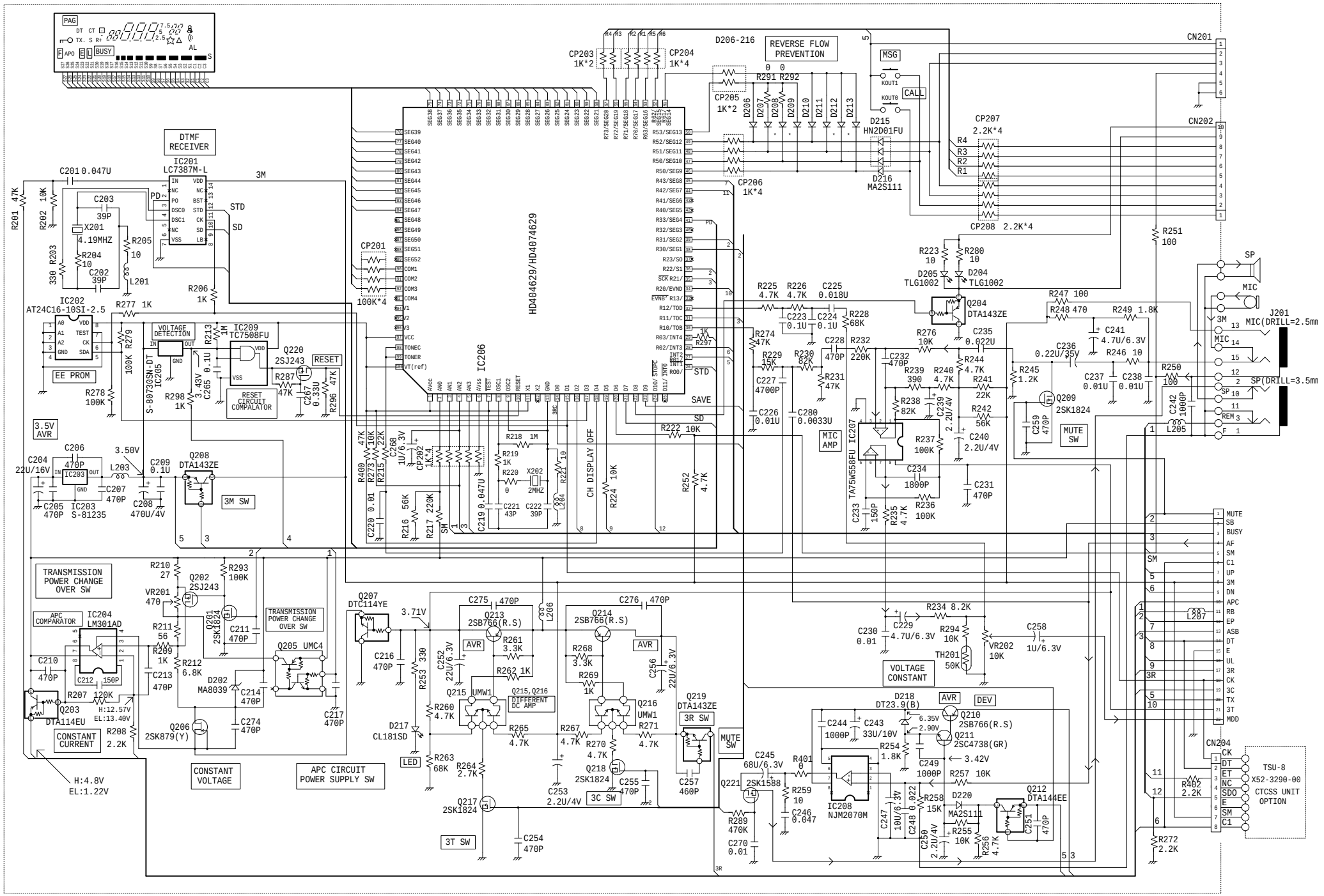
PAG
BUSY
DTMF RECEIVER
IC201 LC7387M-L
C201 0.047U
3M
STD
SD
PD
X201 4.19MHZ
C203 39P
C202 39P
R205 10
R204 10
L201
R201 47K
R202 10K
R203 330
R206 1K
IC202 AT24C16-10SI-2.5
EE PROM
R277 1K
R279 100K
R278 100K
VOLTAGE DETECTION
S-80730SN-DT IC205
R213 1M
IC209 TC7508FU
RESET CIRCUIT COMPALATOR
Q220 2SJ243
RESET
R287 47K
C267 0.33U
R296 47K
R298 1K
C265 0.1U
3.43V
3.5V AVR
C206 470P
IC203 S-81235
C204 22U/16V
C205 470P
C207 470P
L203
3.50V
C209 0.1U
C208 470U/4V
Q208 DTA143ZE
3M SW
CP201 100K*4
HD404629/HD4074629
IC206
CP203 1K*2
CP204 1K*4
CP205 1K*2
CP206 1K*4
D206-216
REVERSE FLOW PREVENTION
MSG
KOUT1
KOUT0
CALL
D215 HN2D01FU
D216 MA2S111
CN201
CN202
CP207 2.2K*4
CP208 2.2K*4
R251 100
R223 10
R280 10
D205 TLG1002
D204 TLG1002
Q204 DTA143ZE
R247 100
R248 470
R249 1.8K
R241 4.7U/6.3V
R246 10
C236 0.22U/35V
R250 100
C237 0.01U
C238 0.01U
C242 1000P
L205
SP
MIC
J201 MIC(DRILL=2.5mm)
SP(DRILL=3.5mm)
R225 4.7K
R226 4.7K
C225 0.018U
C223 0.1U
C224 0.1U
R228 68K
R274 47K
R229 15K
C227 4700P
C226 0.01U
C280 0.0033U
R230 82K
R231 47K
C228 470P
R232 220K
C232 470P
R276 10K
C235 0.022U
R239 390
R240 4.7K
R244 4.7K
R241 22K
R242 56K
R238 82K
C239 2.2U/4V
C240 2.2U/4V
R237 100K
C234 1800P
C231 470P
R236 100K
C233 150P
R235 4.7K
IC207 TA75W558FU
MIC AMP
Q209 2SK1824
C259 470P
R245 1.2K
MUTE SW
R222 10K
R252 4.7K
R218 1M
R219 1K
R220 0
X202 2MHZ
R221 10
L204
C221 43P
C222 39P
C219 0.047U
CH DISPLAY OFF
R224 10K
R400 47K
R273 10K
R215 22K
C268 1U/6.3V
CP202 1K*4
C220 0.01
R216 56K
R217 220K
SM
SAVE
MUTE
SB
BUSY
AF
C1
UP
3M
DN
APC
RB
EP
ASB
DT
E
UL
3R
CK
3C
TX
3T
MDD
TRANSMISSION POWER CHANGE OVER SW
R210 27
Q202 2SJ243
R293 100K
VR201 470
Q201 2SK1824
C211 470P
APC COMPARATOR
IC204 LM301AD
R211 56
R209 1K
R212 6.8K
C210 470P
C212 150P
C213 470P
D202 MA8039
C214 470P
Q205 UMC4
C217 470P
Q203 DTA114EU
R207 120K
H:12.57V
EL:13.40V
R208 2.2K
CONSTANT CURRENT
Q206 2SK879(Y)
C274 470P
H:4.8V
EL:1.22V
CONSTANT VOLTAGE
APC CIRCUIT POWER SUPPLY SW
Q207 DTC114YE
3.71V
C216 470P
R253 330
C252 22U/6.3V
Q213 2SB766(R.S)
C275 470P
AVR
R261 3.3K
R262 1K
Q215 UMW1
Q215,Q216 DIFFERENT DC AMP
R260 4.7K
D217 CL181SD
LED
R263 68K
R264 2.7K
R265 4.7K
Q217 2SK1824
3T SW
C254 470P
L206
Q214 2SB766(R.S)
C276 470P
R268 3.3K
R269 1K
Q216 UMW1
C256 22U/6.3V
R267 4.7K
R270 4.7K
R271 4.7K
Q218 2SK1824
C255 470P
C253 2.2U/4V
3C SW
Q219 DTA143ZE
3R SW
C257 460P
MUTE SW
C230 0.01
C229 4.7U/6.3V
R234 8.2K
R294 10K
TH201 50K
VR202 10K
C258 1U/6.3V
VOLTAGE CONSTANT
D218 DT23.9(B)
AVR
DEV
Q210 2SB766(R.S)
Q211 2SC4738(GR)
C244 1000P
C243 33U/10V
R254 1.8K
C249 1000P
R257 10K
C245 68U/6.3V
R401 0
Q221 2SK1588
R259 10
C246 0.047
IC208 NJM2070M
R289 470K
C270 0.01
C247 10U/6.3V
C248 0.022
R258 15K
D220 MA2S111
Q212 DTA144EE
C251 470P
R255 10K
R256 4.7K
C250 2.2U/4V
R272 2.2K
R402 2.2K
CN204
CK
DT
ET
NC
SDO
E
SM
C1
TSU-8
X52-3290-00
CTCSS UNIT OPTION
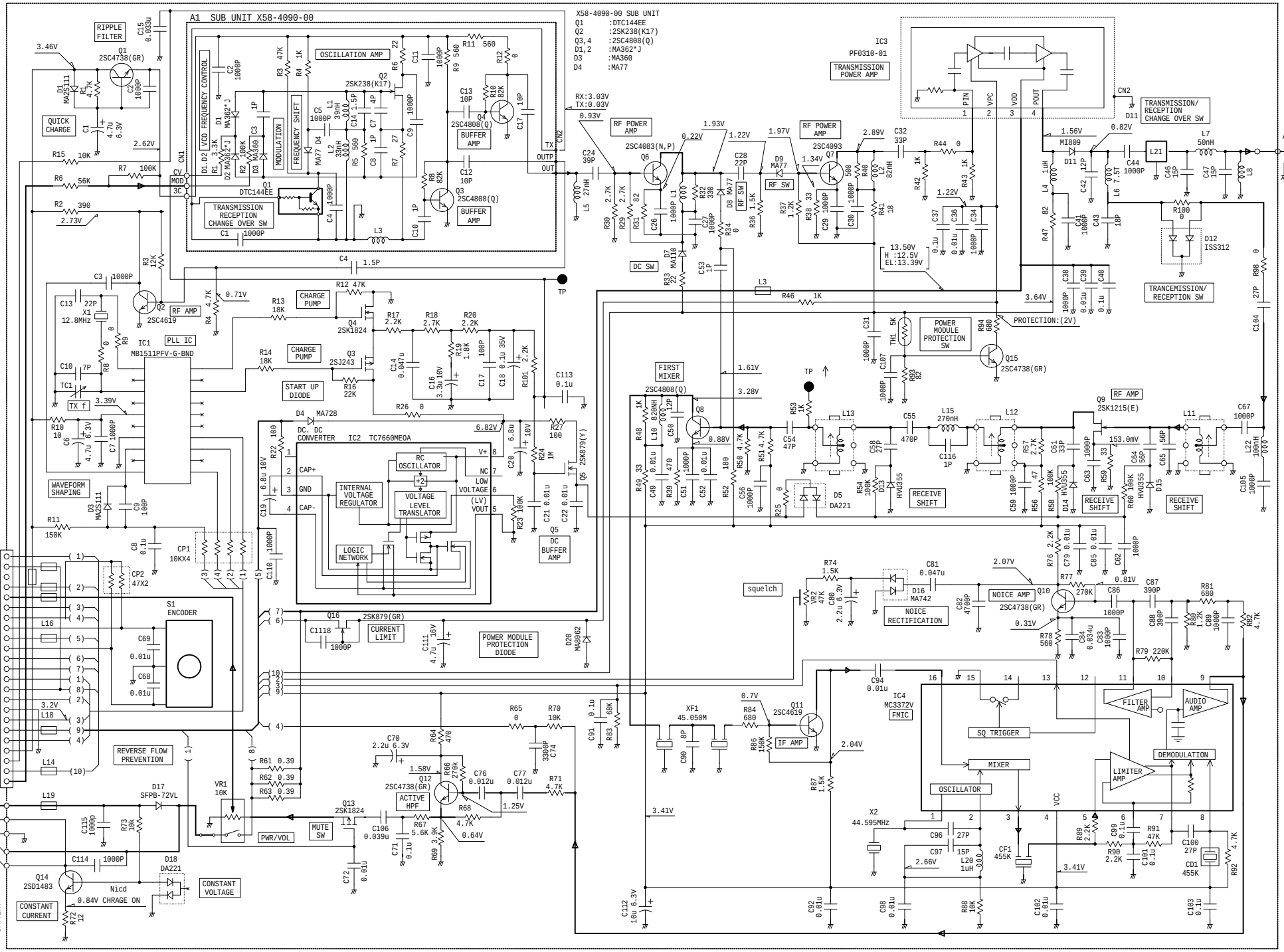
TX-RX UNIT X57-437X-XX(A/4)