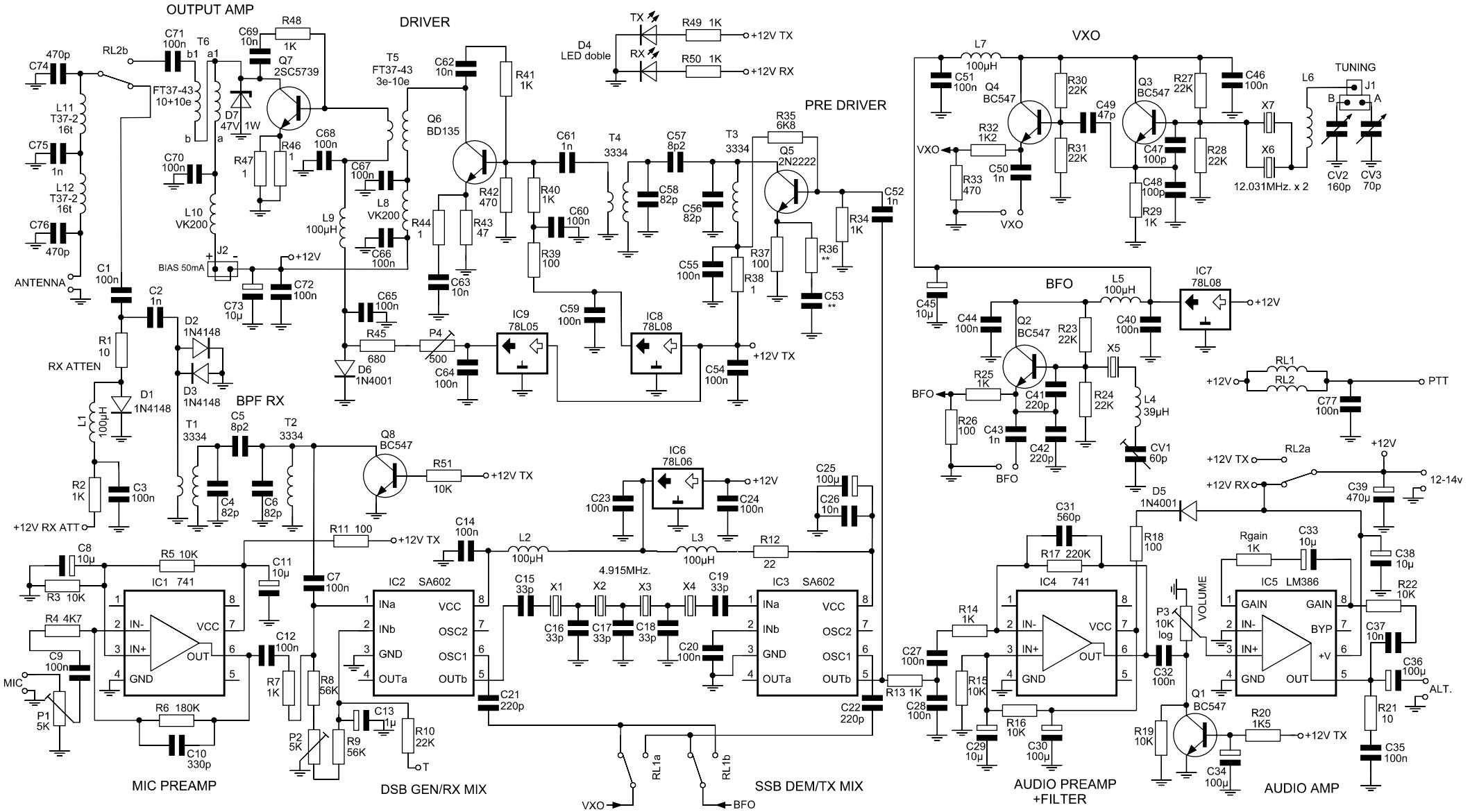
OUTPUT AMP
DRIVER
PRE DRIVER
VXO
BFO
BPF RX
MIC PREAMP
DSB GEN/RX MIX
SSB DEM/TX MIX
AUDIO PREAMP +FILTER
AUDIO AMP
ANTENNA
RX ATTEN
+12V RX ATT
MIC
BIAS 50mA
+12V
+12V TX
+12V RX
TUNING
12.031MHz. x 2
PTT
12-14v
ALT.
VOLUME
4.915MHz.
IC1 741
IC2 SA602
IC3 SA602
IC4 741
IC5 LM386
IC6 78L06
IC7 78L08
IC8 78L08
IC9 78L05
Q1 BC547
Q2 BC547
Q3 BC547
Q4 BC547
Q5 2N2222
Q6 BD135
Q7 2SC5739
Q8 BC547
D4 LED doble
D5 1N4001
D6 1N4001
D7 47V 1W
T1 3334
T2 3334
T3 3334
T4 3334
T5 FT37-43 3e-10e
T6 FT37-43 10+10e
L10 VK200
L8 VK200
L9 100µH
L11 T37-2 16t
L12 T37-2 16t
L1 100µH
L2 100µH
L3 100µH
L4 39µH
L5 100µH
L6
L7 100µH
X1
X2
X3
X4
X5
X6
X7
P1 5K
P2 5K
P3 10K log
P4 500
RL1a
RL1b
RL2a
RL2b
RL1
RL2
VXO
BFO