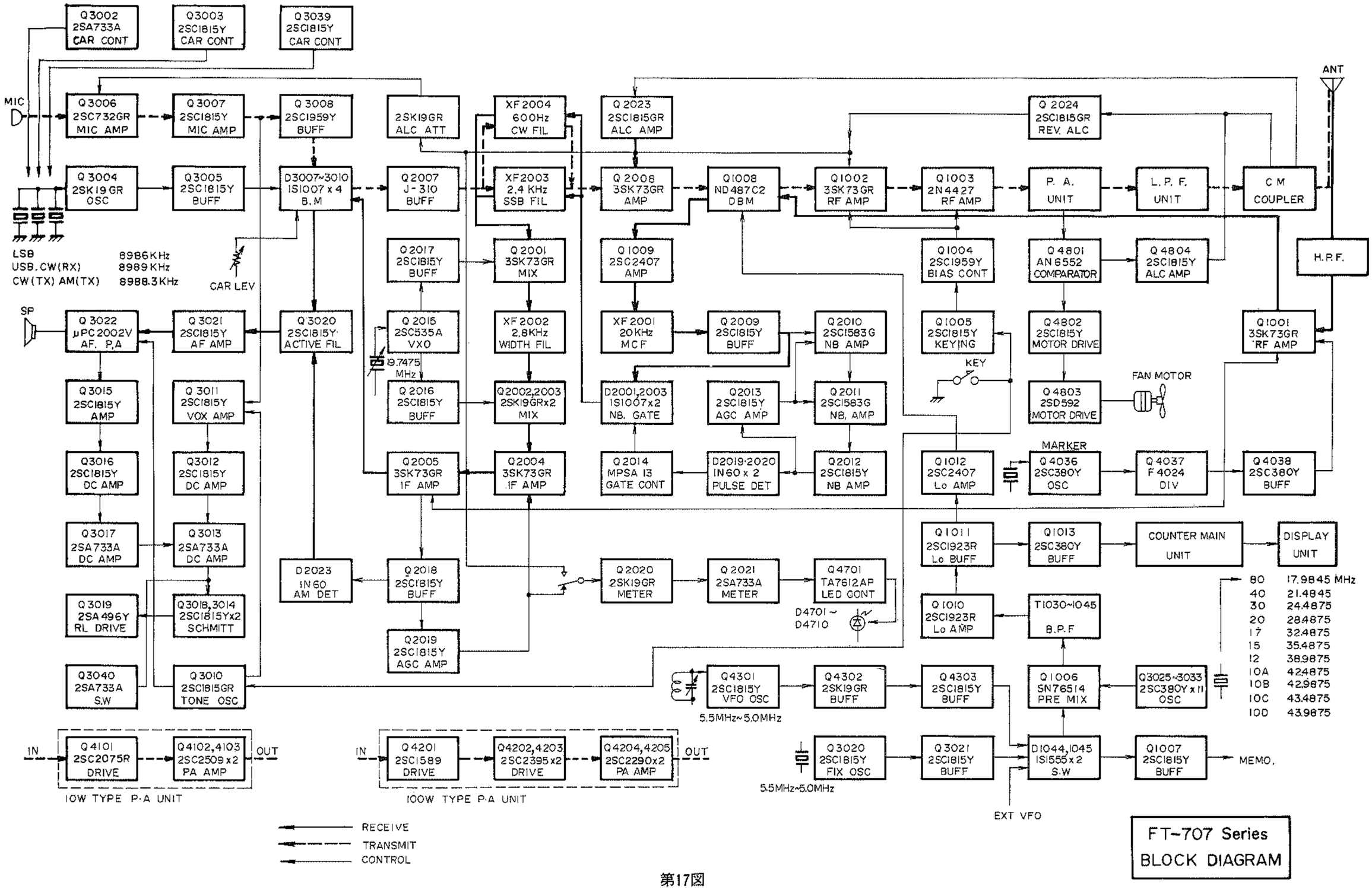
Q3002 2SA733A CAR CONT
Q3003 2SC1815Y CAR CONT
Q3039 2SC1815Y CAR CONT
MIC
Q3006 2SC732GR MIC AMP
Q3007 2SC1815Y MIC AMP
Q3008 2SC1959Y BUFF
2SK19GR ALC ATT
XF2004 600Hz CW FIL
Q2023 2SC1815GR ALC AMP
Q2024 2SC1815GR REV. ALC
ANT
Q3004 2SK19GR OSC
Q3005 2SC1815Y BUFF
D3007~3010 1S1007 x 4 B.M
Q2007 J-310 BUFF
XF2003 2.4 KHz SSB FIL
Q2008 3SK73GR AMP
Q1008 ND487C2 DBM
Q1002 3SK73GR RF AMP
Q1003 2N4427 RF AMP
P. A. UNIT
L. P. F. UNIT
C M COUPLER
LSB
USB.CW(RX)
CW(TX) AM(TX)
8986KHz
8989KHz
8988.3KHz
CAR LEV
Q2017 2SC1815Y BUFF
Q2001 3SK73GR MIX
Q1009 2SC2407 AMP
Q1004 2SC1959Y BIAS CONT
Q4801 AN6552 COMPARATOR
Q4804 2SC1815Y ALC AMP
H.P.F.
SP
Q3022 μPC2002V AF. P.A
Q3021 2SC1815Y AF AMP
Q3020 2SC1815Y ACTIVE FIL
Q2015 2SC535A VXO
XF2002 2.8KHz WIDTH FIL
XF2001 20KHz MCF
Q2009 2SC1815Y BUFF
Q2010 2SC1583G NB AMP
Q1005 2SC1815Y KEYING
Q4802 2SC1815Y MOTOR DRIVE
Q1001 3SK73GR RF AMP
19.7475 MHz
KEY
FAN MOTOR
Q3015 2SC1815Y AMP
Q3011 2SC1815Y VOX AMP
Q2016 2SC1815Y BUFF
Q2002,2003 2SK19GRx2 MIX
D2001,2003 1S1007x2 NB. GATE
Q2013 2SC1815Y AGC AMP
Q2011 2SC1583G NB. AMP
Q4803 2SD592 MOTOR DRIVE
MARKER
Q3016 2SC1815Y DC AMP
Q3012 2SC1815Y DC AMP
Q2005 3SK73GR IF AMP
Q2004 3SK73GR IF AMP
Q2014 MPSA 13 GATE CONT
D2019·2020 IN60 x 2 PULSE DET
Q2012 2SC1815Y NB AMP
Q1012 2SC2407 Lo AMP
Q4036 2SC380Y OSC
Q4037 F4024 DIV
Q4038 2SC380Y BUFF
Q3017 2SA733A DC AMP
Q3013 2SA733A DC AMP
D2023 IN60 AM DET
Q2018 2SC1815Y BUFF
Q2020 2SK19GR METER
Q2021 2SA733A METER
Q4701 TA7612AP LED CONT
Q1011 2SC1923R Lo BUFF
Q1013 2SC380Y BUFF
COUNTER MAIN UNIT
DISPLAY UNIT
Q3019 2SA496Y RL DRIVE
Q3018,3014 2SC1815Yx2 SCHMITT
Q2019 2SC1815Y AGC AMP
D4701 ~ D4710
Q1010 2SC1923R Lo AMP
T1030~1045 B.P.F
80 17.9845 MHz
40 21.4845
30 24.4875
20 28.4875
17 32.4875
15 35.4875
12 38.9875
10A 42.4875
10B 42.9875
10C 43.4875
10D 43.9875
Q3040 2SA733A S.W
Q3010 2SC1815GR TONE OSC
Q4301 2SC1815Y VFO OSC
Q4302 2SK19GR BUFF
Q4303 2SC1815Y BUFF
Q1006 SN76514 PRE MIX
Q3025~3033 2SC380Y x 11 OSC
5.5MHz~5.0MHz
IN
Q4101 2SC2075R DRIVE
Q4102,4103 2SC2509 x 2 PA AMP
OUT
10W TYPE P·A UNIT
IN
Q4201 2SC1589 DRIVE
Q4202,4203 2SC2395 x 2 DRIVE
Q4204,4205 2SC2290 x 2 PA AMP
OUT
100W TYPE P·A UNIT
Q3020 2SC1815Y FIX OSC
5.5MHz~5.0MHz
Q3021 2SC1815Y BUFF
D1044,1045 1S1555 x 2 S.W
Q1007 2SC1815Y BUFF
MEMO.
EXT VFO
RECEIVE
TRANSMIT
CONTROL
FT-707 Series
BLOCK DIAGRAM

第17図

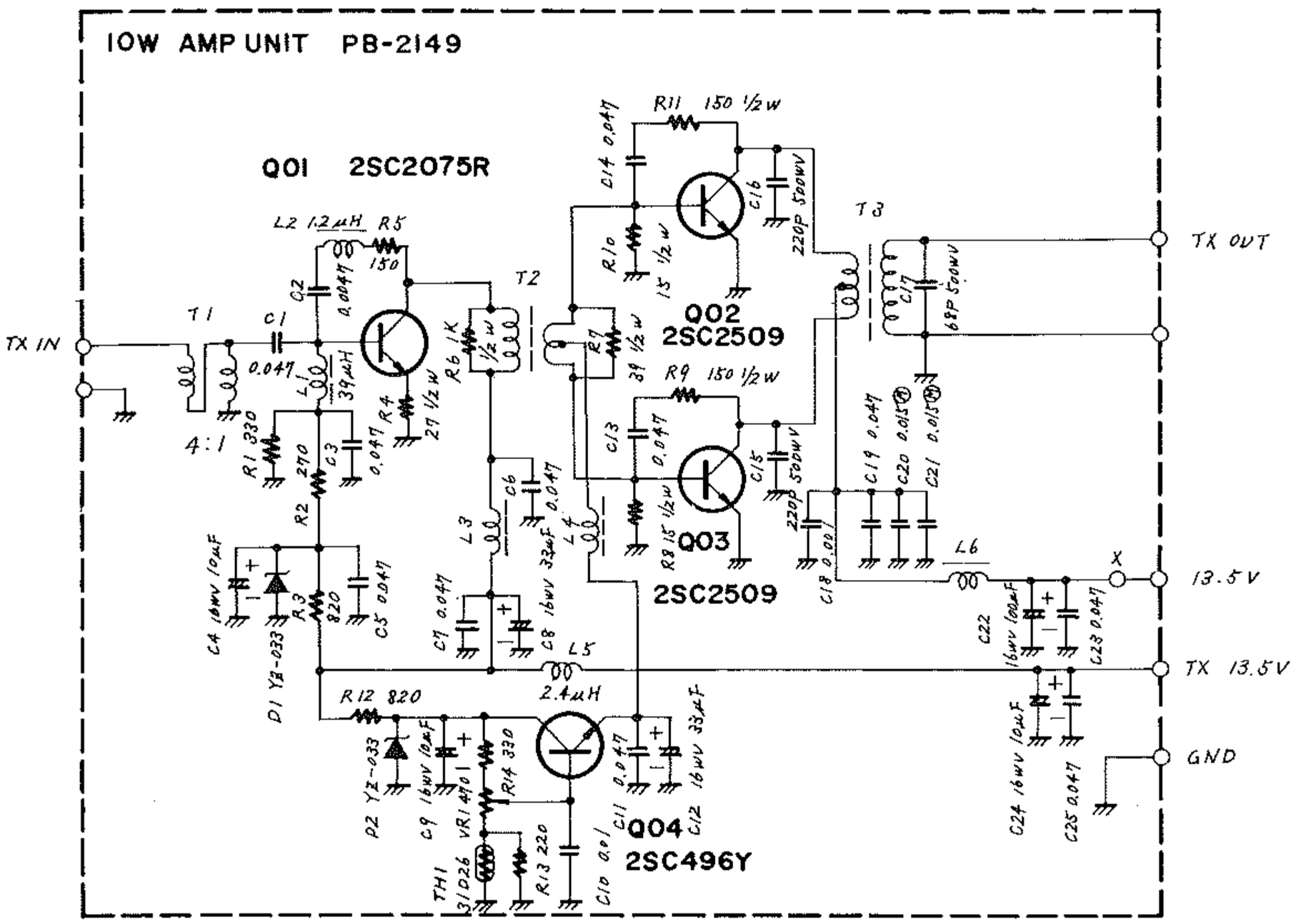

第23図　10W PA UNIT

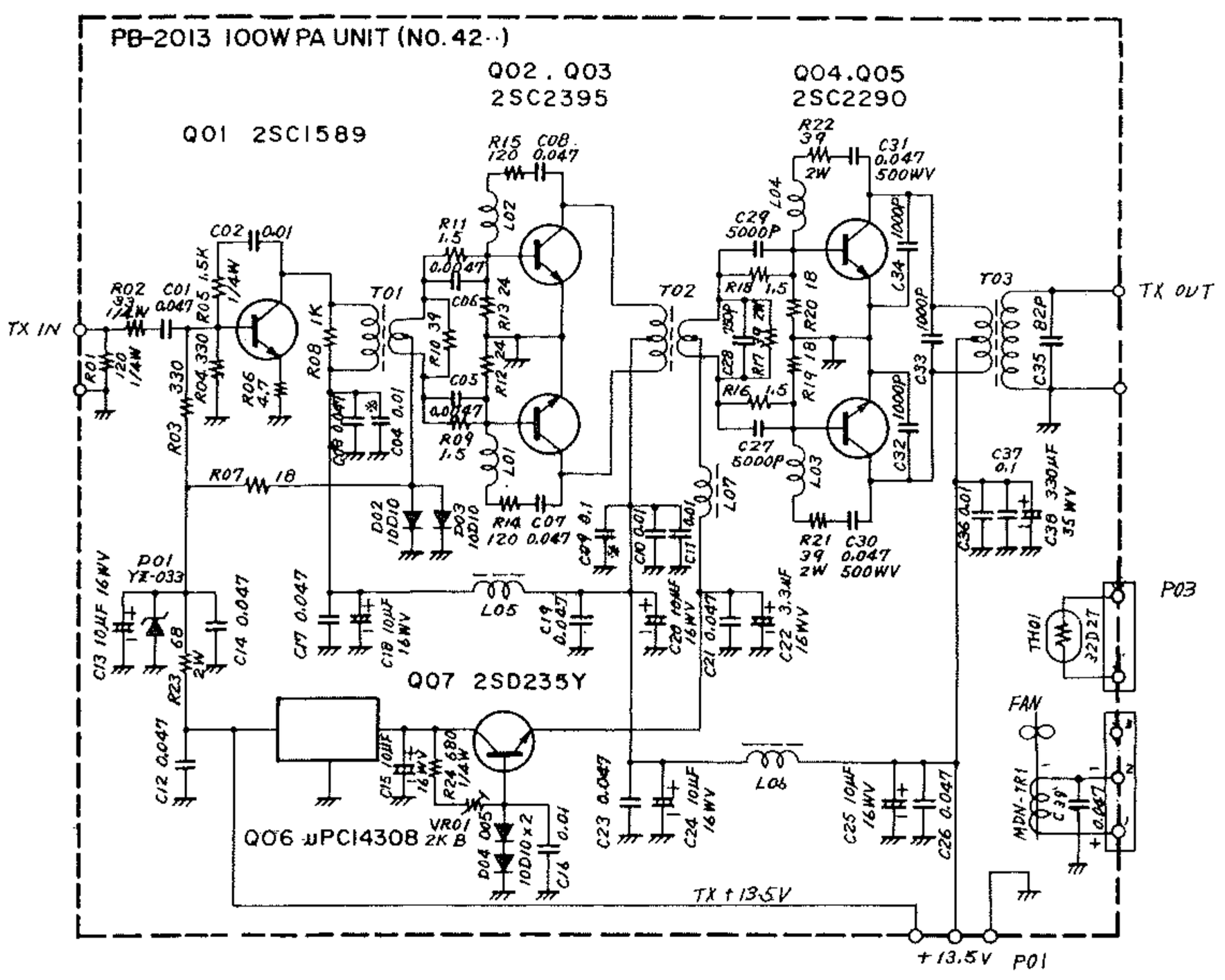

第24図　100W PA UNIT

VR B UNIT

Symbol No.	Parts No.	Description
	C0021031	PCB with Components
	F0002103	Printed Circuit Board
		POTENTIOMETER
VR5101	J51734474	CR19D 470kΩ
(DELAY)		

100W PA UNIT (3540)

Symbol No.	Parts No.	Description
	C0020131A	PCB with Components
	F0002013A	Printed Circuit Board
		IC & TRANSISTOR
Q4206	G1090070	IC μPC14308
Q4201	G3315890	TR 2SC1589
Q4204,4205	G3322900	" 2SC2290
Q4202,4203	G3323950	" 2SC2395
Q4207	G3402350Y	" 2SD235Y
		DIODE
D4201	G2090021	Zener YZ-033
D4202–4205	G2090002	Si 10D10
		RESISTOR
R4209,4211, 4216,4218	J10276159	Carbon composition 1/2W 1.5Ω
R4206	J10276479	" " " 4.7Ω
R4207,4219, 4220	J10276180	" " " 18Ω
R4212,4213	J10276240	" " " 24Ω
R4202	J00245330	Carbon film 1/4W VJ 33Ω
R4210	J10276390	Carbon composition 1/2W 39Ω
R4217,4221, 4222	J20335390	Metallic film 2W 39Ω
R4223	J20335680	" " " 68Ω
R4214,4215	J10276121	Carbon composition 1/2W 120Ω
R4201	J00245121	Carbon film 1/4W VJ 120Ω
R4203,4204	J10276331	Carbon composition 1/2W 330Ω
R4224	J00245681	Carbon film 1/4W VJ 680Ω
R4208	J10276102	Carbon composition 1/2W 1kΩ
R4205	J01245152	Carbon film 1/4W TJ 1.5kΩ
		THERMISTOR
TH4201	G9090009	32D27
		POTENTIOMETER
VR4201	J51727222	CR19R 2.2kΩB
		CAPACITOR
C4205,4206	K10179017	Ceramic 50WV 0.0047μF
C4202	K10176103	" " 0.01μF
C4210,4211, 4216,4236	K10177103	" " 0.01μF
C4201,4203, 4207,4208, 4212,4214, 4217,4219, 4221,4223, 4226,4230, 4231	K13170473	Ceramic 50WV 0.047μF
C4204,4209	K23170005	" chip " 0.1μF
C4237	K14179003	" " 0.1μF
C4235	K30279073	Dipped mica 500WV 82pF
C4243	K	" " " 330pF
C4228	K30279092	" " " 750pF
C4232–4234	K30279051	" " " 1000pF
C4227,4229	K30279118	" " " 5000pF
C4238	K40169003	Electrolytic 35WV 330μF
C4222	K70127335	Tantalum 16WV 3.3μF
C4213,4215, 4218,4220, 4224,4225, 4242	K70127106	" " 10μF
C4240,4041	K50177683	Mylar 50WV 0.068μF
C4239	K50177104	" " 0.1μF
		INDUCTOR
L4201–4204	L1020035	
L4206	L0020395A	
L4205,4207	L1020015	
		TRANSFORMER
T4201	L0020289A	INPUT
T4202	L0020631B	DRIVER
T4203	L0020632	OUTPUT
		MOTOR
	M2190004	MDN-7R1
	R7056970	**RADIAL FAN**
		PLUG
P4202	P1090187	PI051-02F
P4203	P1090188	PI051-03F
	Q5000011	Wrapping terminal C

LED UNIT

Symbol No.	Parts No.	Description
	C0021110A	PCB with Components
	F0002111A	Printed Circuit Board
		LED
D5201–5204	G2090134	TLY-205
		RESISTOR
R5201	J01245561	Carbon film 1/4W TJ 560Ω