RECEPTION SET (AUST.) No 1

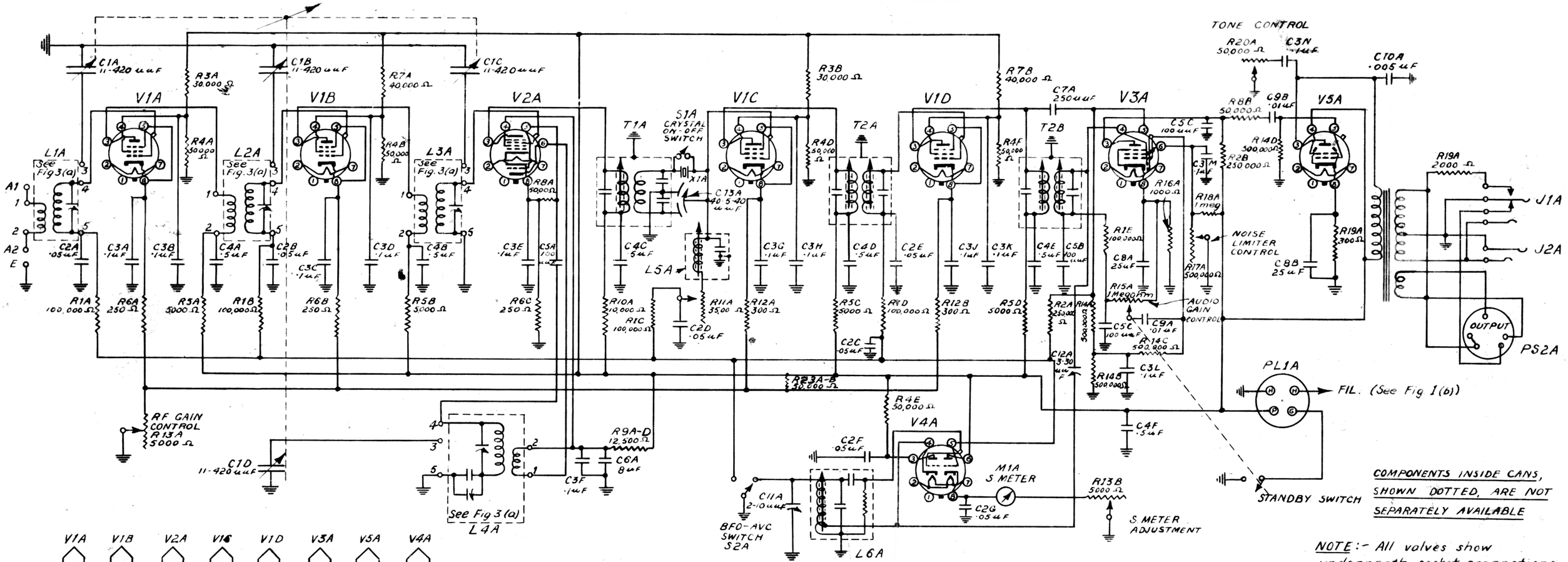

FIG. 1 (a) RECEIVER UNIT, CIRCUIT DIAGRAM

FIG. 1 (b) RECEIVER UNIT, FILAMENT WIRING